INSTRUCTIONS FOR TYPICAL WORKSTATIONS

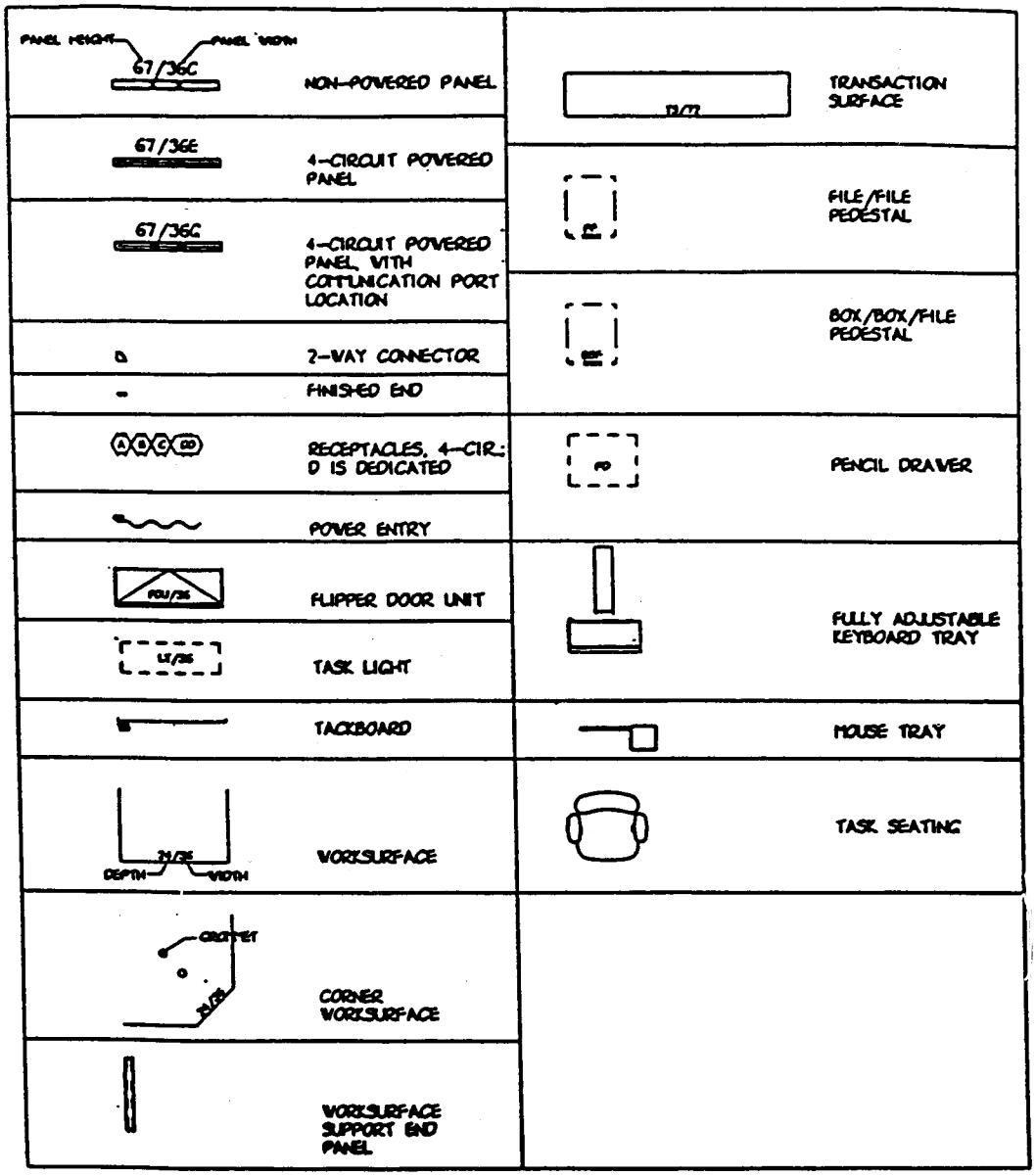

The following typical workstations (A-E) are to each be individually priced by each bidder at list prices. The net prices are to be calculated and recorded on the Bid Form for each pricing tier. These established discounts will then apply to all items purchased for a project, whether included in a typical workstation or not.

Connection components and fillers at junctions with panels, which are not priced, should be itemized and included in the bid price. All other major components listed are considered requirements to which should be added components, hardware and accessories required by the individual bidder to provide a complete, stable, operable workstation that meets all specifications. This would include a manufacturer's electrical connections, structural connections, visual refinements, etc. These individual parts or packages should be listed on the station worksheets. The total package will be verified and expected to be complete for each workstation for the User's in budgeting. The State, with the successful bidders' assistance, will edit their price lists to conform to State Standards, as far as what is available to the Users on this contract.

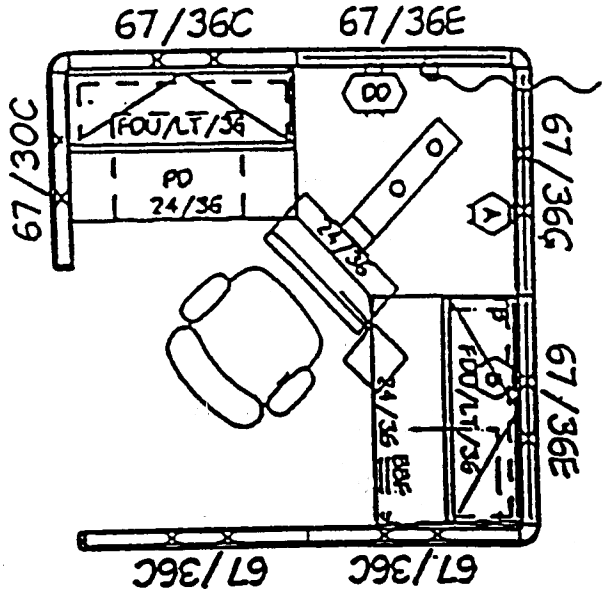

6X6 COMPUTER CLERICAL

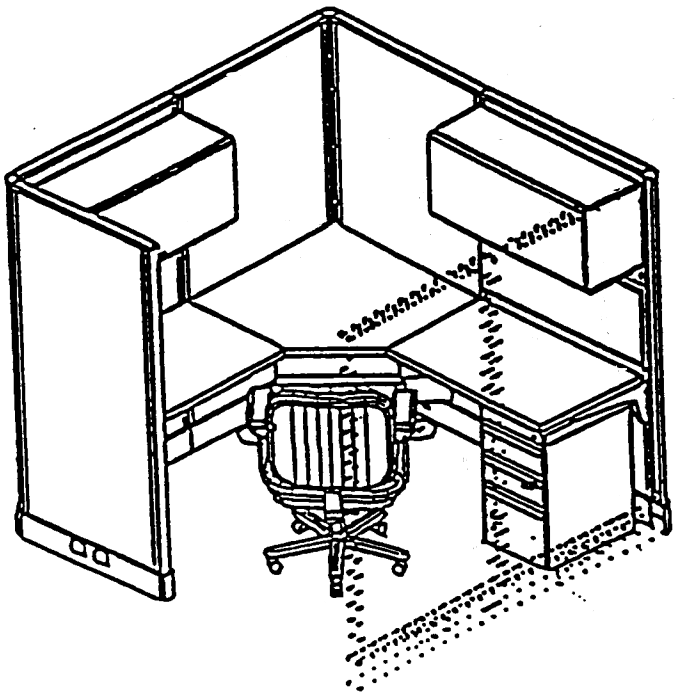

TYPICAL "A"

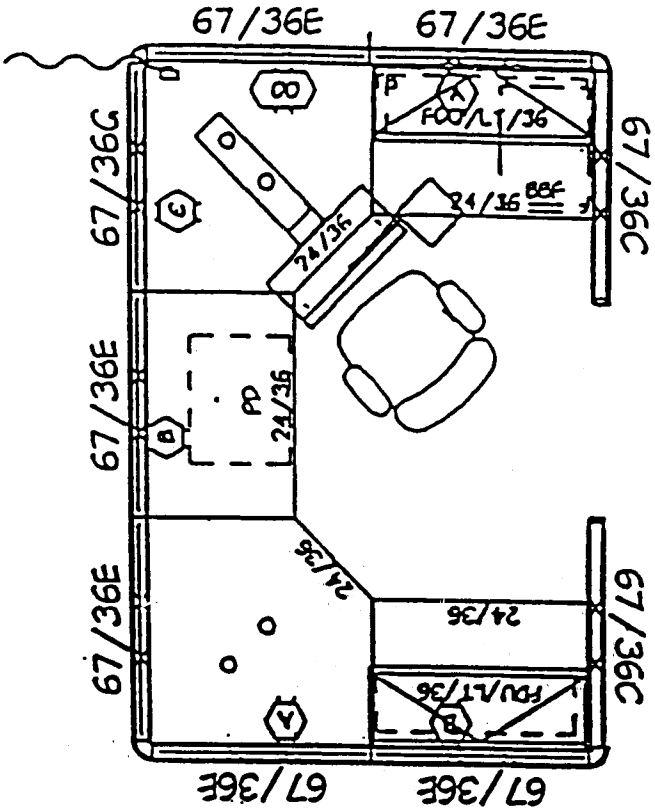

6X9 COMPUTER CLERICAL

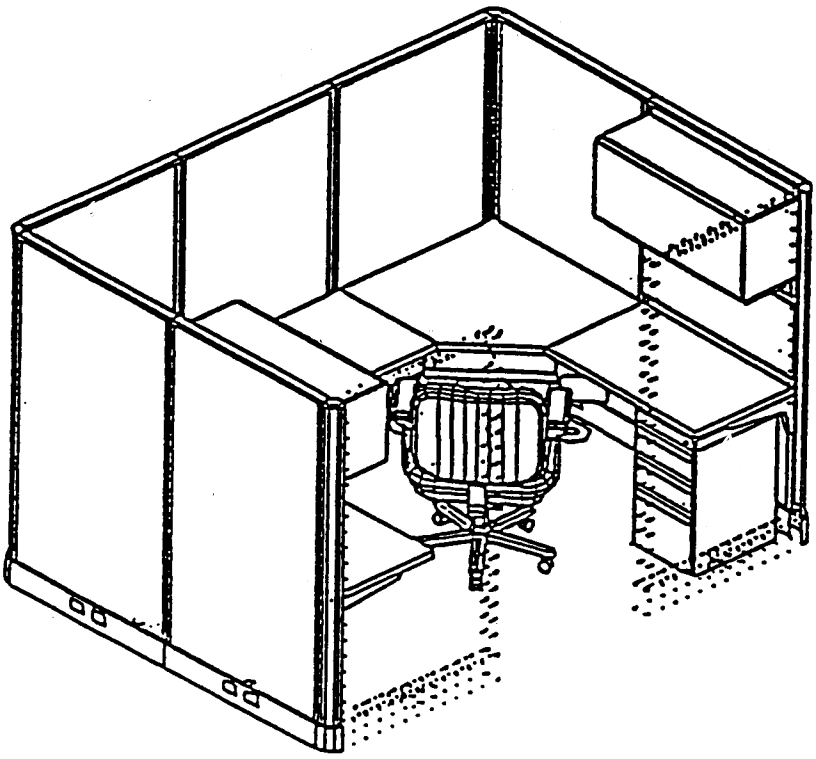

TYPICAL "B"

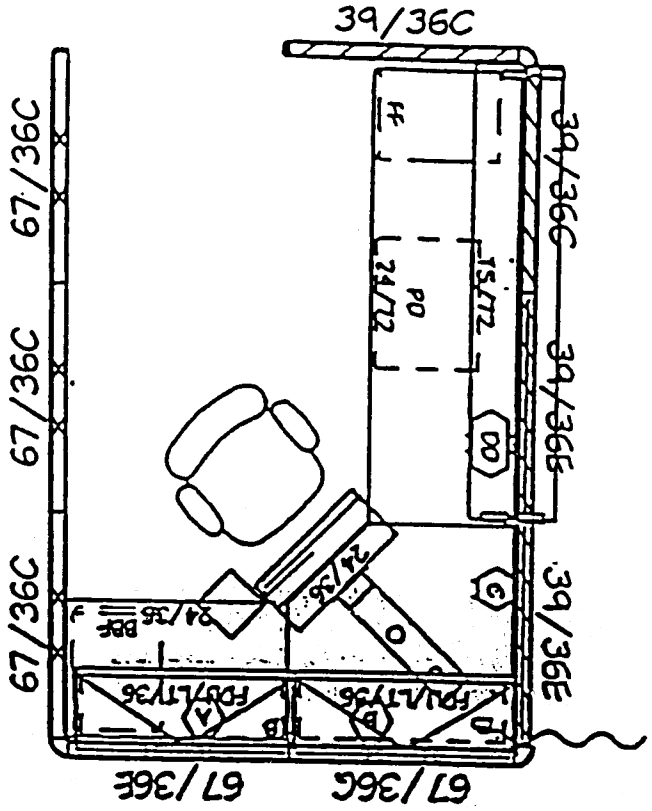

6X9 RECEPTION STATION

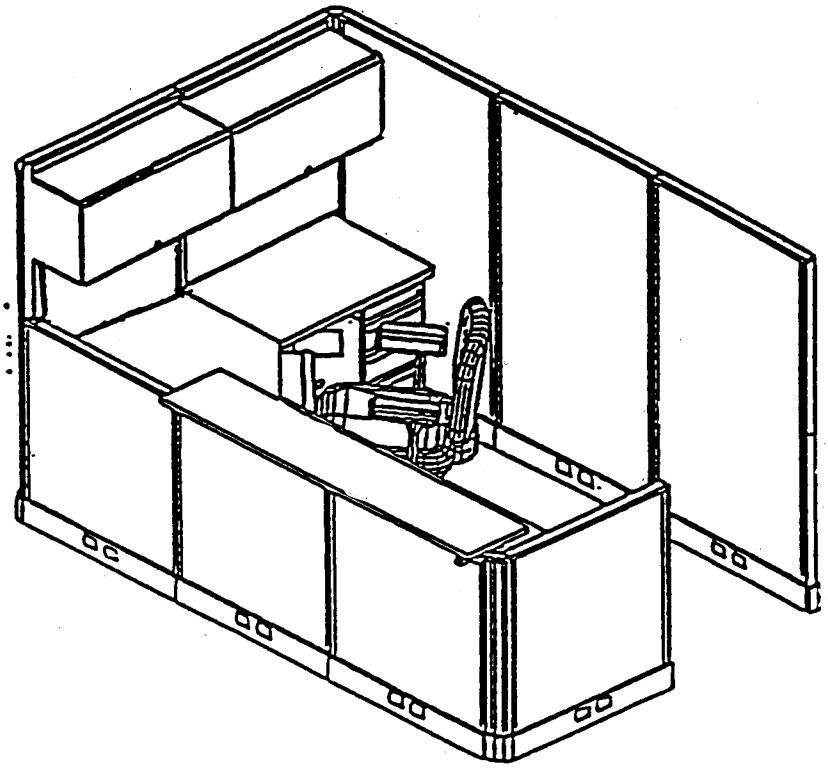

TYPICAL "C"

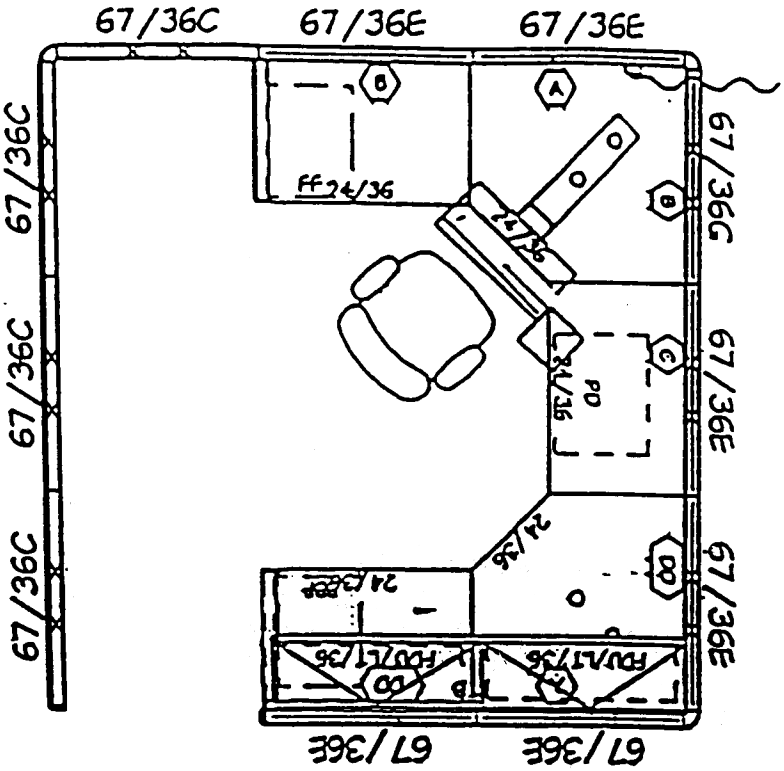

9X9 COMPUTER PROFESSIONAL

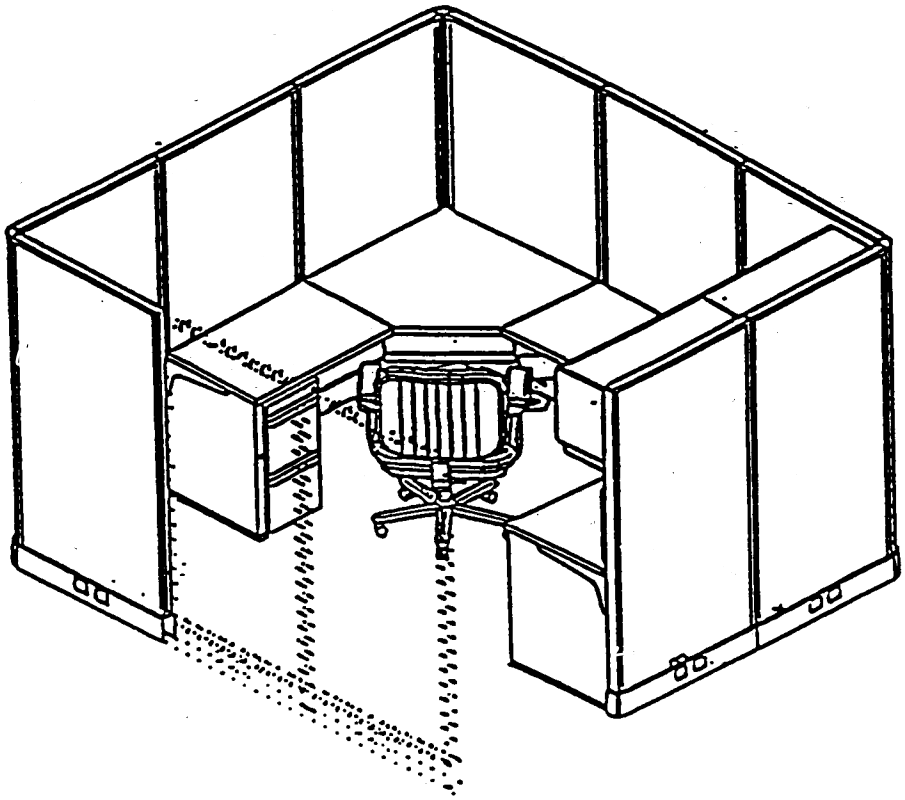

TYPICAL "D"

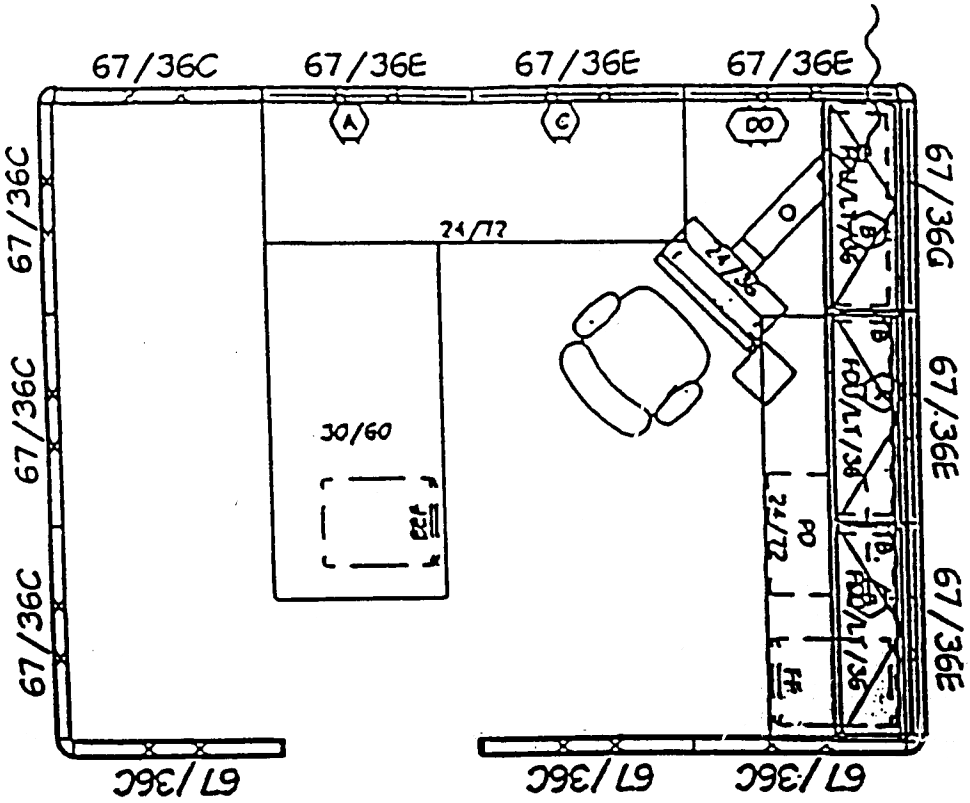

9X12 MANAGEMENT

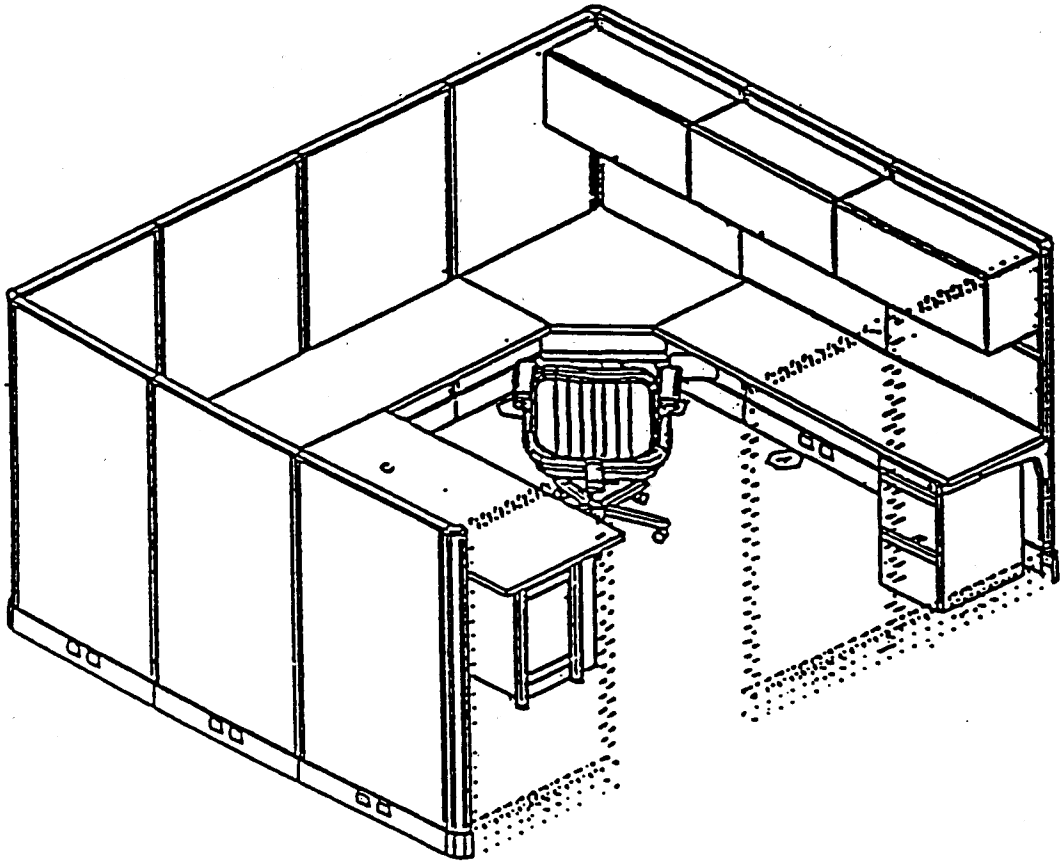

TYPICAL "E"