DISASTER RECOVERY INITIATIVE
U.S. DEPARTMENT OF HOUSING AND URBAN DEVELOPMENT

ALLOCATIONS, WAIVERS AND ALTERNATIVE REQUIREMENTS FOR GRANTEES RECEIVING COMMUNITY DEVELOPMENT BLOCK GRANT
DISASTER RECOVERY FUNDS IN RESPONSE TO DISASTERS OCCURRING IN 2011, 2012 AND 2013 THE DISASTER RELIEF APPROPRIATIONS ACT, 2013 (PUBLIC LAW 113-2)
FEDERAL REGISTER DOCKET NO. FR-5696-N-03

LOUISIANA OFFICE OF COMMUNITY DEVELOPMENT-DISASTER RECOVERY UNIT

STATE OF LOUISIANA
SUBSTANTIAL AMENDMENT NO. 5:
INTRODUCTION OF NEW ACTIVITIES AND
PROJECT NARRATIVE CLARIFICATIONS
FOR THE UTILIZATION OF
COMMUNITY DEVELOPMENT BLOCK GRANT FUNDS
UNDER THE NATIONAL DISASTER RESILIENCE COMPETITION (NDRC)
RESETTLEMENT OF ISLE DE JEAN CHARLES

Public Comment Period: Monday, April 8, 2019 until 5 p.m. Tuesday, April 23, 2019
SUBMITTED TO HUD: May 14, 2019 APPROVED BY HUD: _____, 2019

John Bel Edwards
Governor

Billy Nungesser
Lieutenant Governor

Jay Dardenne
Commissioner of Administration

Overview

This Action Plan Amendment #5 (first Substantial Action Plan Amendment) is considered substantial because it adds eligible activities to achieve the program goals. The APA also clarifies information contained in the state's Phase II Application to the National Disaster Resilience Competition:

1. Replaces program descriptions for the Isle de Jean Charles Resettlement (Exhibit B: Threshold Requirements – Page 15 and Exhibit E: Soundness of Approach – Pages 105-109, **National Disaster Resilience Competition Phase II Application**);
2. Amends Eligible Activities denoted for the Isle de Jean Charles Resettlement (Exhibit B: Threshold Requirements – Page 13 and Exhibit E: Soundness of Approach – Page 109, *National Disaster Resilience Competition Phase II Application*);

Isle de Jean Charles Program Description

(Amendment to Exhibits B and E)

Subsequent to the state's submission of its application to the National Disaster Resilience Competition, the state has worked closely with leaders and residents of Isle de Jean Charles and the surrounding communities, national resettlement and Native American subject matter experts and other nonprofit organizations to better understand the intricate complexities faced by a diverse set of stakeholders. The program description in this section amends and replaces Exhibits B and E in the state's Phase II Application in order to provide additional context and understanding of the project's multiple stakeholders and the diversity of potential program participants.

National Disaster Resilience Competition (NDRC)

The U.S. Department of Housing and Urban Development (HUD), in collaboration with the Rockefeller Foundation, conducted a two-phase National Disaster Resilience Competition (NDRC) to distribute $1 billion in funding to state and local governments to help communities recover from natural disasters and advance resilience-building initiatives.

At the competition's conclusion, HUD awarded Community Development Block Grant National Disaster Resilience (CDBG-NDR) funds to thirteen (13) state and local governments. The State of Louisiana was awarded $92,629,249 of CDBG-NDR funds for the following projects, to be administered by the Office of Community Development – Disaster Recovery Unit (OCD-DRU):

- **Louisiana's Strategic Adaptations for Future Environments (LA SAFE)** – $39,750,000 for the planning and capitalization of a state-administered fund to provide gap assistance for public, privately-owned and/or nonprofit projects and programs for Resilient Housing, Resilient Transportation, Resilient Energy, Resilient Infrastructure, Economic Development, Public Services, Community Nonstructural Mitigation/Flood Risk Reduction, and/or Planning/Education. These concept proposals were presented as project, program, and policy recommendations emanating from a multi-phase, community-driven planning effort, to be codified in parish-wide Strategic Adaptation Plans. Using information and projects identified in the Strategic Adaptation Plans, the state will work with eligible communities to select CDBG-NDR projects to be funded through the LA SAFE Program. In addition to the HUD CDBG-NDR award, the State of Louisiana has committed an

additional sum of $7,750,000 in supporting leverage, bringing the total value of the initiative to $47,500,000.

- **Isle de Jean Charles Resettlement –** $48,379,249 for the Resettlement of Isle de Jean Charles, a coastal island community in coastal Terrebonne Parish currently experiencing severe land loss and extreme flood risks, to a resilient and historically contextual community. The Resettlement of Isle de Jean Charles is broken down into multiple phases: (1) Data Gathering and Engagement, (2) Site Selection, Acquisition, and Master Planning, (3) Development and Construction and (4) Living in the New Community.

In addition to the funds for these two (2) projects, HUD awarded to the state $4,500,000 for administrative costs.

Resettlement of Isle de Jean Charles: The Multifaceted View

Imperiled on the front line of coastal erosion and rising seas, the bayou region of south Louisiana is home to diverse peoples and cultures. The residents of Isle de Jean Charles—a people of predominantly tribal ancestry—live in this region, on an island that is rapidly disappearing into the Gulf of Mexico. Once encompassing more than 22,000 acres, only 320 acres of Isle de Jean Charles remain. The sole connecting road to the mainland—Island Road, built in 1953—is often impassable due to high winds, tides, sea level rise or storm surge. This effectively blocks residents from school, work and essential goods and services.

The land where island residents and their families once hunted, trapped, grazed animals and farmed is now open water. Unfortunately, it is not realistic to save the island's landmass. So the question arises, how does the state help residents resettle to a new home, while preserving their culture and values in a new place that offers a prosperous and sustainable future? In response to that question, a dedicated team of state and local officials, planners, engineers, architects and policymakers is collaborating with current and former island residents to develop a program for the Resettlement of Isle de Jean Charles.

Even with this focused effort, the Resettlement emerges as a complex process, involving a wide range of cultural, social, environmental, economic, institutional and political factors. As with any inclusive effort, all stakeholders bring unique values and perspectives to the table, which often complicates consensus-based decision-making. Therefore, the Resettlement cannot be driven solely by economic and operational objectives but must incorporate a comprehensive, holistic and open-ended approach.

Resettlement Funding: HUD Awards $48.3 Million in CDBG Disaster Recovery Funding

In January 2016, HUD awarded the State of Louisiana $48.3 million in Community Development Block Grant funds for the Resettlement of Isle de Jean Charles, as part of the Office of Community Development's winning application to the National Disaster Resilience Competition.[1]

---

[1] United States Department of Housing and Urban Development. "HUD Awards $1 Billion Through National Disaster Resilience Competition." Last modified Jan. 29, 2016. https://www.hudexchange.info/news/hud-awards-1-billion-through-national-disaster-resilience-competition/
Grantee profiles: https://www.hud.gov/sites/documents/NDRCGRANTPROF.PDF

With Resettlement funding now in place, Louisiana has the ability to make possible a structured and voluntary retreat from Isle de Jean Charles that is thoughtful and equitable, while maximizing opportunities for current and past island residents.

Resettlement Mission: Holistic Approach to Relocation

From the outset, the state's expressed purpose has been to provide all current, permanent residents with relocation options that reflect the values of Isle de Jean Charles' people. In keeping with this goal and mindful of dire environmental conditions faced by island residents, the intended primary beneficiaries of the Resettlement are current, permanent residents of the island and former island households displaced since Aug. 28, 2012.[2]

The Resettlement team is committed to implementing the relocation process in a manner that emphasizes residents' self-determination. Guided by an understanding of their expressed priorities, needs and concerns, the new settlement will reflect the Isle de Jean Charles community's values, cultural affiliations and economic objectives.

With resilience in mind, the Resettlement will incorporate sustainable materials and practices conducive to residents' future safety and stewardship of natural resources. Moreover, as the Resettlement establishes itself over time, the state expects on-site generated revenue and capital to contribute to the economic sustainability of the new community, specifically as the community's commercial corridor is established.

Finally, in addition to serving the needs of the island residents, the state hopes its holistic approach will illustrate best practices and lessons learned for the Resettlement of other diverse and culturally rich communities facing climate-driven relocation.

Resettlement Goals: Safety, Collaboration, Sustainability and Preservation

The goals of the Isle de Jean Charles Resettlement include:

- Assist willing island residents in moving out of harm's way to safe, new homes in a community that provides an improved quality of life; or, if they prefer not to join the community, they may move to an established home in a lower-risk area in Louisiana.
- Collaborate with current and past island residents on the design of the new community.
- Ensure that the community is economically sustainable in its new location.
- Facilitate preservation and continuity of islanders' diverse cultural identities and traditions.
- Create a holistic approach to the Resettlement that will illustrate best practices and lessons learned for consideration by other diverse and culturally rich communities facing climate-driven relocation.
- Create an opportunity for past island residents to rejoin the community in its new location.

Resettlement Context: The American Indian Ancestry of Isle de Jean Charles

In 1979, the Houma Alliance and the Houma Tribe merged into the United Houma Nation (UHN), forming a new not-for-profit organization. In 1981, the UHN joined the Intertribal Council of Louisiana, which guides Louisiana government in matters concerning American Indians. In 1985, the United Houma Nation, which

[2] This date marks Hurricane Isaac's landfall, which qualified OCD's Resettlement project for funding through HUD's National Disaster Resilience Competition.

included some residents of Isle de Jean Charles, filed its first petition for federal recognition, which was denied in 1994. UHN filed a rebuttal in 1996.

Following the Bureau of Indian Affairs' denial of the United Houma Nation's petition for federal recognition in 1994, some individuals withdrew from the UHN. The Biloxi-Chitimacha Confederation of Muskogees, Inc. (BCCM) and the Pointe-au-Chien Tribe each filed separate petitions for federal recognition, but both were denied in 2008. On July 1, 2015, the U.S. Department of the Interior published a new set of guidelines for recognition. All three Tribes are now seeking federal recognition under the revised regulations.

Some U.S. states have established legal processes to evaluate and recognize American Indian tribes and organizations that are not federally recognized, in order to provide aid or assistance to members of those groups. These processes vary across states and there is no official registry of state-recognized tribes. In 2004, the Louisiana legislature acknowledged the Indian ancestry of members of the Pointe-au-Chien Indian Tribe; and the Isle de Jean Charles Band, the Bayou Lafourche Band, and the Grand Caillou/Dulac Band of the BCCM (referred to in the resolution as the "BCCM tribes") "for the sole purpose of qualifying for Indian education and health care benefits due these Native American citizens" (Louisiana Senate Concurrent Resolution No. 105).

Resettlement Census: The Current Population of Isle de Jean Charles

After HUD awarded the grant to the State of Louisiana, OCD conducted a census of island residents. This was the first foray into what would become an extensive, on-the-ground outreach and engagement initiative, which also documented the island's infrastructure. During this initial effort, the team formed relationships with many island residents, as well as the extended community.

Through this exhaustive process, the state discovered a diverse community of sometimes competing tribal interests. Some residents speak of ties to the BCCM, while others speak of ties to the UHN. Some speak of ties to both tribes, and still others speak of no tribal affiliation. The outreach team also noted that many former island residents, identifying with differing tribal affiliations, moved inland after repeated disasters, seeking safety and economic opportunity. Hence, in addition to resettling current residents, the program is designed to give former residents a chance to rejoin the community in its new location.

Regardless of which tribe residents and former residents identify with, the Resettlement is, by federal law and the state's desire, not tied to any particular tribe, race or belief system. The residents' participation in the Resettlement is entirely voluntary; the state is not forcing anyone to leave the island and will ensure that all residents make their own decisions, free from fear or favor. The state continues to conduct outreach and strengthen relationships with island residents in many ways, including regular visits to the island.

Resettlement Transitional Housing: Optional Relocation Assistance Program

Nearly 20 island families are living in upland rental units off the island while the new community is being developed. This interim rental option allows residents the ability to relocate prior to completion of the new community. These families represent about half of the island's 2016 population. Other residents have opted to remain on the island until the new community is ready for move in.

Resettlement Development: In Phases

Phase I: Data Gathering and Engagement (June 2016-November 2016)

Phase I included initial outreach to and engagement with current island residents, as well as a preliminary land use and infrastructure survey of the Island. The team's interactions with residents provided insight into residents' priorities and revealed additional complexities to be addressed during subsequent phases. The team learned that residents' values include privacy, seclusion, access to water, safety, flood protection, continued access to the island and maintaining and strengthening cultural identity. However, values vary widely from individual to individual—there is no single, homogenous set of community priorities shared by all island residents. The program team continues to build relationships with each island resident to ensure this diversity of values and priorities is well represented in the development of a new community for Isle de Jean Charles. A final report on Phase I can be found at www.isledejeancharles.la.gov/phase-1-resettlement-project.

Phase II: Site Selection, Acquisition and Master Planning (December 2016-February 2019)

Understanding and reflecting residents' needs and their vision for their future community is the project's highest priority. As part of the Resettlement's planning phase, a series of public meetings and one-on-one conversations took place, with meetings continuing throughout the planning effort to ensure island residents have ongoing engagement with team members and the resettlement process as a whole.

- **November 2016 – May 2017:** The state conducted an exhaustive site evaluation process throughout Terrebonne Parish. In May 2017, the state provided island residents an opportunity to visit potential sites for the new community.

- **July 2017 – September 2017:** In July 2017, the Resettlement team hosted its third community meeting to discuss the pros and cons of the identified suitable tracts; to discuss general market and appraised values; and to take a site-preference survey of island residents. The state also issued an RFP for a master planner. A selection committee, which included representatives from the island community, chose a consultant team to develop a master plan. The planning team has worked closely with current and former island residents to solidify design plans and programming for the new Isle de Jean Charles community, including a structured retreat from the island.

- **January 2018 – September 2018:** A steering committee comprising island residents and members from various island community stakeholders—including representatives from the UHN and BCCM tribes—convened six times throughout the master planning process. The steering committee serves as an advisory board and liaison between the state and the island community. A separate academic advisory committee provides guidance to the planning team. The academic advisory committee includes local and national scholars who understand the environment and cultures of the region, as well as the complexities of resettlement processes.

- **March 2018:** The state placed a purchase option on the property residents selected during the site preference survey.

- **December 2018:** Following completion of site due diligence, including federally required environmental reviews, the Louisiana Land Trust, on behalf of the state, purchased the selected property for development of the new community.

Phase III: Development and Construction (March 2019-October 2019)

Phase III is the execution phase, during which the state will implement the master plan created during Phase II. Phase III will consist of completing the next phase of the environmental review, finalizing site design work, acquiring permits, laying infrastructure, constructing housing, initiating business development activities, launching workforce training programs and helping residents move into the new community. **See Program Options & Method of Distribution — Resettlement Options: Eligibility and Benefits.**

Phase IV: Living in the New Community

Eligible families who participate in the program will enter into a forgivable mortgage on the property in the new community. One-fifth of the mortgage will be forgiven each year over the course of five years, during which time no payments are required, provided the resident maintains primary residency and the required insurance on the new property. After five years the resident will own the new property in full, provided these requirements have been met.

Resettlement Constraints: Compliance with Federal Laws and Funding Requirements

Given that the Resettlement is federally funded with CDBG funds from HUD, the project is subject to a vast and complex body of regulations and laws. Two federal requirements are particularly relevant to the program design: *cost reasonableness* and compliance with the *Fair Housing Act*.

Cost Reasonableness: Relocation Costs and Continued Use of Island Property

As required by HUD, costs paid with CDBG funds must be necessary and reasonable[3] to carry out the grant's objectives. The state's application argued that high-risk conditions on the island make it unsafe for habitation—a position HUD agreed with in awarding the grant to OCD and reaffirmed in 84 FR 4836 (2/19/19). It is neither necessary nor reasonable to use federal funds to relocate families from high-risk properties, only to allow those families to return to those high-risk properties for residential purposes in the future. Not only would this place them in harm's way, it would also create a potential need for more disaster recovery funding in the future.

That said, the island holds an important sense of place for its current and former residents. As detailed in the state's application to HUD, it is critical to allow property owners continued access to the island for ceremonial, cultural, historic and recreational purposes. Therefore, in order to comply with HUD requirements and respect the desires of islanders, the state has created an approach that allows owners continued access to their island properties. This approach allows existing structures to remain intact while ensuring the properties are not used for residential purposes or future redevelopment. This is an innovative solution and a significant departure from traditional HUD-funded relocation programs, which require vacated land to become permanent open space. Moreover, as HUD asserts in 84 FR 4836, "While it is important to permit the community's continued access to the island for these limited purposes, it is also important to take reasonable measures to ensure that the land is no longer used for primary residences or

[3] 2 CFR 200.403, 2 CFR 200.404

otherwise developed in ways that frustrate the purposes of the grant to relocate the community to a safer area."

To achieve these goals, the state has proposed two legal options for property owners to choose from in exchange for Resettlement assistance:

- **Option 1** — A mortgage on the property; or
- **Option 2** — A deed restriction in the form of an easement, also known as a "servitude" under Louisiana law.

These legal commitments will allow program participants continued use of island property for non-residential purposes, including recreational, cultural and/or historic purposes. Former and current island residents who do not own island property will enter into a personal grant agreement that limits their current or future use of any island property to non-residential purposes.

The Fair Housing Act

In addition to cost reasonable requirements, the Resettlement must comply with the Fair Housing Act, which makes it illegal for public or private housing developments to discriminate based on race, color, religion, sex, disability, familial status or national origin. Therefore, the program is open to all residents of the island, and in later phases to past residents of the island, regardless of tribal affiliation, race, color, religion, sex, national origin, familial status or disability.

Resettlement Status: Anticipated Events

The formal application process for participations in the Resettlement will launch in early 2019. Resettlement team members will host a series of outreach events to provide additional information and answer questions. Dates and locations of outreach events are yet to be determined. Groundbreaking is anticipated in fall 2019, after the state releases a master plan for the new site. For more information, visit IsleDeJeanCharles.la.gov.

Heart of the Resettlement: Parting from the Island

The Resettlement of Isle de Jean Charles is a process filled with both relief and uncertainty for islanders. Most islanders know they should move; but for many, this move will take them away from all they have ever known. Several residents have expressed concern about the distance between the new community and the island.

In interviews with the Resettlement team, island residents revealed they see Isle de Jean Charles as a place of security and isolation. They embrace the rural setting—the quiet, the tranquility and most of all, their relationship with the water. It is a place where they know each other and their history, and a place where both independence and care for neighbors and family are core values.

Despite its challenges, residents know how to live on the island. They are resilient and ingenious "do-it-yourself" individuals who can repair their houses and fix their cars, heaters and pipes. They know how to prepare for storms and how to recover afterward. Some of these skills are transferable to the new site, but others will be lost. As one islander said, "I have never fished in fresh water; I have only fished in salt water." He went on to describe how he views the difference and the magnitude of change it requires. This is just one of the many changes islanders are facing. Although the proposed move is only 40 miles north, in many ways, it is a world away.

Parting from the island will be a transformative process, as individuals and families adapt in significant ways. The Resettlement team will continue to work closely with the community to ensure that throughout this leave-taking and the losses it entails, there are new opportunities, new connections, and a new peace and security to be found.

Program Description & Method of Distribution

The state initiated closing proceedings on the Evergreen site in December 2018, in partnership with the Louisiana Land Trust (LLT), a 501(c)(3) nonprofit organization the state has partnered with in the past to transact in real property, most notably in conjunction with the Road Home program following hurricanes Katrina and Rita.

For the purposes of distribution of grant resources, the State has entered into a Cooperative Endeavor Agreement (CEA) with the LLT to conduct site development activities. All other programmatic activities will either be conducted by the state directly or through subsequent execution of CEA or other subgrantee/subrecipient agreements.

Resettlement Options: Eligibility and Benefits

The Resettlement options are first available to residents currently living on the island, or those displaced since Hurricane Isaac's landfall in 2012 who do not own a home. The state also anticipates that former permanent island residents displaced before Hurricane Isaac will be able to rejoin the Isle de Jean Charles community at the new site, if they lived in a federally declared disaster parish at the time of Hurricane Isaac. Any unused lots in the new community will be made available to the public through other housing programs or public auction for residential housing development.

A New Home in the New Community	A New Home in Louisiana	A Vacant Lot in the New Community
Eligibility Criteria		
• Current permanent, primary residents on the island • Past permanent, primary residents displaced on or after Aug. 28, 2012 (Hurricane Isaac) who do not currently own an off-island home. Residents who were displaced after the storm and were not permanent residents of the island at the time of the storm must have lived in a Hurricane Isaac federally-declared disaster parish on Aug. 28, 2012.	• Current permanent, primary residents on the island • Past permanent, primary residents displaced on or after Aug. 28, 2012 (Hurricane Isaac) who do not currently own an off-island home. Residents who were displaced after the storm and were not permanent residents of the island at the time of the storm must have lived in a Hurricane Isaac federally-declared disaster parish on Aug. 28, 2012.	• Past permanent, primary residents displaced before Aug. 28, 2012 (Hurricane Isaac), who lived in a Hurricane Isaac federally-declared disaster on Aug. 28, 2012 and who can demonstrate financial ability to build a new home • Eligible applicants will be prioritized based on when they left the island. • Past permanent, primary residents displaced on or after Aug. 28, 2012 who presently own a home

A New Home in the New Community	A New Home in Louisiana	A Vacant Lot in the New Community

Available Benefit		
Eligible households will receive a new housing unit built at the community resettlement site.	Eligible households will receive funding toward an existing home within Louisiana that meets program standards, is located outside the currently recognized 100-year floodplain and is separate from the community resettlement site.	Eligible households will receive a vacant lot on the resettlement site. The program will support residents in identifying potential financing options to build a home on the community resettlement site.

Resettlement Options: Summary Diagram

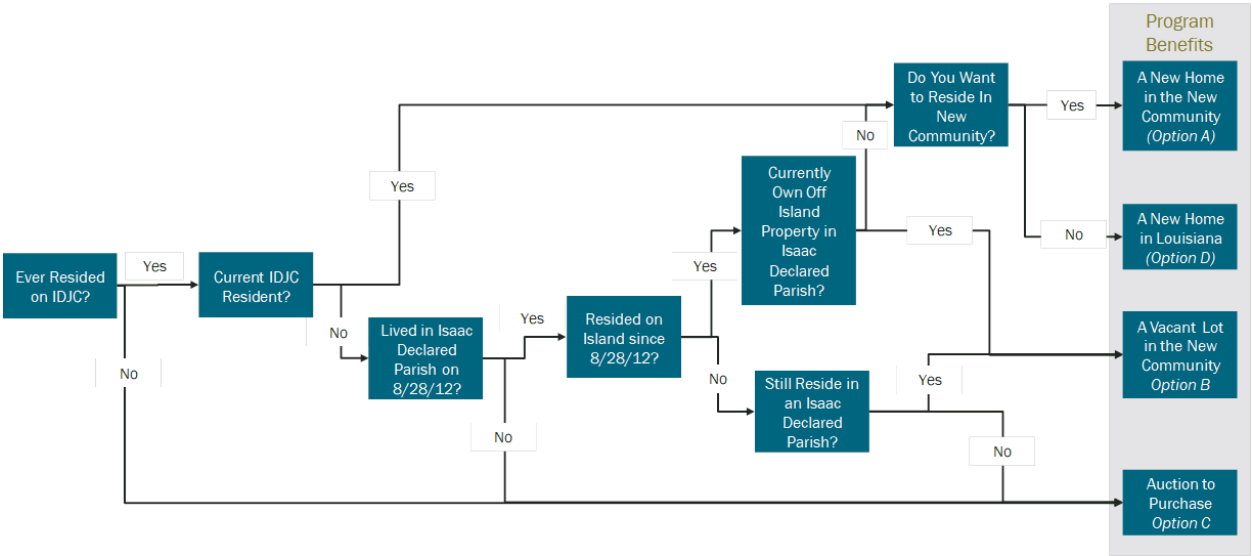

Eligible Activities

This Action Plan Amendment #5 proposes to amend Eligible Activities as follows:

Eligible Activities Proposed in Application

Activity Number	Description
105(a)(1)	Acquisition of Real Property
105(a)(4)	Clearance, Rehabilitation, Reconstruction, and Construction of Buildings (Including Housing)
105(a)(11)	Relocation
105(a)(12)	Planning and Capacity Building

Proposed Added Eligible Activities

Activity Number	Description
105(a)(2)	Public Facilities
105(a)(7)	Disposition of Real Property
105(a)(8)	Public Services
105(a)(16)	Planning and Capacity Building (Renewable Energy/Conservation)
105(a)(14)	Activities Carried Out through Nonprofit Development Organizations

105(a)(15)	Assistance to neighborhood-based nonprofit organizations, local development corporations, nonprofit organizations serving the development needs of the communities in nonentitlement areas, or entities organized under section 301(d) of the Small Business Investment Act of 1958 to carry out a neighborhood revitalization or community economic development or energy conservation projects
105(a)(17)	Economic Development Assistance to For-Profit Business
105(a)(19)	Technical Assistance
105(a)(22)	Microenterprise Assistance
105(a)(24)	Homeownership Assistance
84 FR 4836	Housing Incentives, new construction and disposition as provided through all applicable waivers and alternative requirements
81 FR 36557 & 82 FR 36812	Other waivers and alternative requirements provided in current and future Federal Register Notices related to the activities previously approved and activities added in this substantial APA

Each of the proposed new activities anticipate eligible additional needs that may arise during development and construction activities, or have been highlighted as potential programming needs during or following construction activities for a new Isle de Jean Charles settlement. Proposed new activities are described below:

- **105(a)(2) Public Facilities:**
  The state will use program funding to make infrastructure improvements necessary for the development of the new community to include, but not limited to: a community center, streets, sewerage, water and other utilities, sidewalks, parks, etc. If funding is available, the program may also construct additional public facilities.

- **105(a)(7) – Disposition of Real Property:**

  The state envisions two potential scenarios regarding this activity:

  1. Sales, leases and donations specific to real property dispositions within the newly-developed Isle de Jean Charles Community Resettlement location. This may include residential lots deeded to community members, critical infrastructure and recreational spaces to be maintained by a governing nonprofit or unit of local government, and sales and leasing activities for commercial purposes and to the economic benefit of the community;
  2. Disposition of any interests in real property acquired relative to the current Isle de Jean Charles.

  As noted by 84 FR 4836, "HUD is clarifying that costs incurred by the State to establish and record mortgage liens or limited real property interests on the island to restrict the use of the land as a primary residence are eligible costs that may be charged to the grant as part of the State's new construction and disposition activities to relocate island residents." Additionally, "the actions are not undertaken as part of acquisition activities that trigger buyout requirements."

- **105(a)(8) – Public Services:**

If resources allow, the state may seek to provide public services related to the economic and social long-term viability of a new community settlement. Such services may include, but are not limited to, those concerned with employment, health, education, energy conservation, recreational needs, or limited legal services.

- **105(a)(14) – Activities Carried Out through Nonprofit Development Organizations:**

  The state may choose to conduct activities through a nonprofit it has historically partnered with, such as the Louisiana Land Trust, or through a successor nonprofit organization ultimately responsible for governance and maintenance of the new Isle de Jean Charles settlement upon completion of construction activities.

- **105(a)(15)- Assistance to Neighborhood Based Development Organizations:**

  The state anticipates providing assistance to and/or entering into a subrecipient agreement with a nonprofit corporation who will serve as the primary governing entity of the newly-established Isle de Jean Charles community. This entity will:

  1. Be a neighborhood-based nonprofit organization, local development corporation or nonprofit organization serving the development needs of the community(ies) and have a mission that is consistent with Section 105(a)(15) of the Housing and Community Development Act of 1974;
  2. Enact and execute community governing documents;
  3. Manage and maintain community properties not owned or controlled by residents, Terrebonne Parish Consolidated Government or its public subsidiaries, or other parties as may be applicable;
  4. Administer or procure the administration of community functions such as budgeting, revenue collection and disbursement, programming, or other services as is appropriate.

- **105(a)(16) – Planning and Capacity Building (Renewal Energy/Conservation):**

  The community's master plan currently envisions development of on-site solar power, either through a large-scale solar farm, solar paneling installed on a unit-by-unit basis, or a combination of both. This eligible activity would allow for planning and capacity-building efforts related to such development activities.

- **105(a)(17) – Economic Development Assistance to For-Profit Business:**

  Development of a new settlement for Isle de Jean Charles includes the development of a new commercial corridor for economic development purposes pursuant to the long-term economic sustainability of the settlement and its inhabitants. This may include assistance to for-profit businesses to (a) create or retain jobs for low- and moderate-income persons, (b) create businesses owned by community residents, (c) assist businesses that provide goods or services needed by, and affordable to, low- and moderate-income residents, or (d) provide technical assistance to promote any of the purposes listed herein.

- **105(a)(19) – Technical Assistance:**

  The state may choose to conduct activities through a nonprofit it has historically partnered with, such as the Louisiana Land Trust, or through a successor nonprofit organization ultimately responsible for governance and maintenance of the new Isle de Jean Charles settlement upon completion of construction activities. As such, provision of technical assistance to a partner nonprofit may be appropriate in conjunction with development and post-construction programmatic activities.

- **105(a)(22) – Microenterprise Assistance:**

  In the course of developing commercial activities within the new Isle de Jean Charles Community settlement, economic development activities may be required offering credit and other loan products, technical assistance and business support services, and general support to businesses with five or fewer employees.

- **105(a)(24) – Homeownership Assistance:**

  The Isle de Jean Charles Resettlement Program envisions homeownership assistance activities in two forms:

  1. Provision of direct assistance to members of the Isle de Jean Charles Community through homeownership assistance within a new Isle de Jean Charles Community settlement;
  2. Provision of direct assistance to current and recently displaced permanent residents of Isle de Jean Charles through an option to secure off-Island permanent housing apart from a new community settlement.

  Note, per 84 FR 4836, "as a condition of receiving newly constructed housing, the State plans to restrict owners' use of their former land on the island as a primary residence."

Program Budget

Current Program Budget in DRGR

Title	Current Budget
IDJC Acquisition of Real Property	$12,300,000.00
IDJC Relocation	$8,000,000.00
IDJC Optional Relocation Assistance	$350,000.00
IDJC Public Facilities and Improvements	$21,472,750.00
IDJC Economic Development Assistance	$3,956,499.00
IDJC Planning and Capacity Building	$2,300,000.00
Total	**$48,379,249.00**

This Action Plan Amendment #5 does not propose specific budget changes. As is consistent with past programs, any future changes to eligible activities, national objectives and funding sources associated with

specific initiatives within the Isle de Jean Charles Resettlement Program will be made within program files and within the DRGR.

National Objective

All activities will meet either Low-to-Moderate Income (LMI) or Urgent Need (UN) national objectives in the manner described below:

- **Low to Moderate Income (LMI) National Objective** – Activities which benefit households whose total annual gross income does not exceed 80% of Area Median Income (AMI), adjusted for family size. Income eligibility will be determined and verified in accordance with HUD guidelines for adjusted gross income. The most current income limits, published by HUD annually, shall be used to verify the income eligibility of each household applying for assistance at the time the assistance is provided.
    - *Very Low:* Household's annual income is up to 30% of the area median income, as determined by HUD, adjusted for family size;
    - *Low:* Household's annual income is between 31% and 50% of the area median family income, as determined by HUD, adjusted for family size;
    - *Moderate:* Household's annual income is between 51% and 80% of the area median family income, as determined by HUD, adjusted for family size.
- **Urgent Need (UN) National Objective** – An urgent need that exists because existing conditions pose serious and immediate threat to health/welfare of community, the existing conditions are recent or recently became urgent (typically within 18 months) and the recipients cannot finance the activities on their own because other funding sources are not available.

Every household assisted under this program will meet one of these national objectives in the following ways:

- L/M Income Housing (direct benefit) if the household to be assisted is L/M and is occupying replacement housing.
- Urgent Need (direct benefit) – if the activity addresses the serious threat to community welfare following the disaster and the household assisted is above 80% AMI.

All programmatic activities specific to the Resettlement of Isle de Jean Charles are currently intended to benefit LMI persons based on area benefit, limited clientele, housing or employment (jobs). However, the program may provide benefits to populations meeting the UN definition, once all eligible LMI populations are served, should benefits provided to such UN populations be required in order to meet stated goals of the program, as outlined above in the section titled **Resettlement Goals: Safety, Collaboration, Sustainability and Preservation.**

Citizen Participation Requirements

Per streamlined citizen participation requirements for CDBG-NDR grants, as outlined in the Notice of Funding Availability (NOFA) detailing parameters and requirements relative to the National Disaster Resilience Competition (NDRC) as well as applicable Federal Register Notices (FRNs) published June 7, 2016 and August 7, 2017, respectively, the following measures have been taken to ensure applicable requirements have been met:

Reasonable opportunity (at least 15 days) for citizen comment prior to submittal:

Date amendment posted for formal public comment: April 8, 2019

Date amendment submitted to HUD: April 23,2019

Citizens and organizations can comment on this amendment via:

- The OCD-DRU website, http://www.doa.la.gov/Pages/ocd-dru/Action_Plans.aspx;
- Emailing them to ocd@la.gov;
- Mailing them to Disaster Recovery Unit, P.O. Box 94095, 70804-9095, Attn: Janice Lovett; or
- Faxing them to the attention of Janice Lovett at (225) 219-9605.

One public hearing at the Applicant's level of government:

Hearing location: 2nd Floor Council Meeting Room at Government Tower, 8026 Main Street in Houma, Louisiana

Hearing date: Tuesday, April 16

Documentation of Public Notification

OCD PUBLICATION EFFORTS TO NOTIFY PUBLIC OF IDJC APA 5

1. OCD published the following Public Notice of Public Hearing for IDJC APA 5 on April 5, 2019 in the following two regional papers: The Baton Rouge Advocate (state journal of record) and The Houma Courier:

LOUISIANA OFFICE OF COMMUNITY DEVELOPMENT HOLDS PUBLIC HEARING FOR NDR GRANT APA5

The Louisiana Office of Community Development will hold a public hearing in conjunction with its proposed Action Plan Amendment 5 regarding its National Disaster Resilience grant from the U.S. Department of Housing and Urban Development. The hearing will be held Tuesday, April 16, 2019 from 4 p.m. to 6 p.m., in the 2nd Floor Council Meeting Room at Government Tower, 8026 Main Street in Houma, Louisiana. During the hearing, OCD representatives will accept comments from the public on the Action Plan Amendment, which can be found online at https://www.doa.la.gov/Pages/ocd-dru/Action_Plans.aspx. Members of the public can also submit comments several other ways:

- Using the online form at http://www.doa.la.gov/Pages/ocd-dru/Action_Plans.aspx ;
- Emailing them to ocd@la.gov;
- Mailing them to Disaster Recovery Unit, P.O. Box 94095, 70804-9095, Attn: Janice Lovett; or
- Faxing them to the attention of Janice Lovett at (225)219-9605.

2. OCD posted an announcement of the Public Hearing, as well as the full text of IDJC APA 5, on the OCD website.

3. OCD published the following Public Notice of Public Comment for IDJC APA 5 on April 8, 2019 in the Legal Notices section of eight statewide papers: The Baton Rouge Advocate (state journal of record); The Houma Courier; The Alexandria Town Talk; The Lafayette Daily Advertiser; The Monroe News Star; The Lake Charles American Press; and The New Orleans Times-Picayune:

SUMMARY OF THE PROPOSED ACTION PLAN AMENDMENT NO. 5 FOR UTILIZATION OF CDBG-DR FUNDS FOR RESETTLEMENT OF RESIDENTS OF ISLE DE JEAN CHARLES

The Louisiana Office of Community Development is accepting public comments on an Action Plan Amendment that adds new activities to a state program to resettle the residents of Isle de Jean Charles. The U.S. Department of Housing and Urban Development considers APA 5 substantial because it adds eligible activities to achieve the program's goals. APA 5 also clarifies information contained in the state's Phase II Application to the National Disaster Resilience Competition.

Action Plan Amendment 5 will:

- **Make infrastructure improvements** necessary for the new community, such as streets, sewerage, water and other utilities, sidewalks, parks, etc. If funding is available, the program will also construct community center and/or other public facilities.
- **Dispose of real property**, such as residential lots deeded to community members; sales and leasing of critical infrastructure and recreational spaces; commercial sales and leasing for the economic benefit of the community; and dispose of any interests in real property acquired on the island.
- **Provide public services** related to the economic and social long-term viability of the new community, such as employment, health, education, energy conservation, recreational needs, or limited legal services.
- **Develop renewal energy and conservation** via on-site solar power, either through a large-scale solar farm, solar paneling installed on a unit-by-unit basis, or a combination of both.
- **Create a partnership with a nonprofit** corporation responsible for maintaining the new community after construction, such as the Louisiana Land Trust.
- **Assist a neighborhood-based nonprofit** corporation to serve as the main governing body of the newly established community.
- **Provide technical assistance to nonprofit** organizations that govern the new community and maintain the new site.
- **Develop a new commercial corridor** to promote the long-term economic sustainability of the community, which may include helping businesses that create or retain jobs for low- and moderate-income residents and/or provide affordable goods or services.
- **Provide microenterprise assistance** to new commercial corridor businesses with five or fewer employees.
- **Provide homeownership assistance** to island residents who move to the new community and to those current and recently displaced residents who wish to secure permanent housing off the island, but not in the new community.

The formal public comment period for Action Plan Amendment 5 begins today, April 8, 2019 and continues until 5 p.m. Tuesday, April 23, 2019. A copy of the plan can be viewed at http://www.doa.la.gov/Pages/ocd-dru/Action_Plans.aspx or requested by calling (225)219-9600. After accepting public comments, the state will submit the plan to the U.S. Department of Housing and Urban Development for final federal approval.

Members of the public can submit comments several ways:

- Using the online form at http://www.doa.la.gov/Pages/ocd-dru/Action_Plans.aspx ;
- Emailing them to ocd@la.gov;
- Mailing them to Disaster Recovery Unit, P.O. Box 94095, 70804-9095, Attn: Janice Lovett; or
- Faxing them to the attention of Janice Lovett at (225)219-9605.

The funds are part of $92,629,249 in Community Development Block Grant disaster recovery money awarded by HUD to the Louisiana Office of Community Development as a winning entry in the National Disaster Resilience Competition in 2016. The award was for two projects: the Resettlement of IDJC and LA SAFE.

Vietnamese: Muốn biết thêm chi tiết về Kế Hoạch Hành Động, xin gọi số (225) 219-9600 hoặc viết về địa chỉ điện thư janice.lovett@la.gov.

Spanish: Para más información sobre el plan de acción, llame al (225) 219-9600 o email janice.lovett@la.gov.

4. OCD distributed the following news release announcing Public Comment for IDJC APA 5 to statewide media, state legislators, IDJC stakeholders, and OCD and HUD staff on April 8, 2019:

STATE SEEKS PUBLIC COMMENTS ON ENHANCED PLAN FOR RESETTLEMENT OF RESIDENTS OF ISLE DE JEAN CHARLES

The Louisiana Office of Community Development is accepting public comments on an Action Plan Amendment that adds new activities to its program to resettle the residents of Isle de Jean Charles, an island in Terrebonne Parish that is rapidly disappearing into the Gulf of Mexico.

The IDJC resettlement site is located about 40 miles north of the island on the mainland in the Schriever area of Terrebonne Parish. Each of the proposed activities anticipates the additional needs that may arise because of development, construction and program implementation.

“As we move forward in creating this new community, we will naturally adjust our plans to remain responsive to and adapt to the emerging needs of the island residents while continuing to progress toward the program’s goals,” Pat Forbes, OCD executive director, said. “APA 5 is a substantial demonstration of this process of flexible adaptation.”

Action Plan Amendment 5 will make infrastructure improvements and develop renewal energy sources on the new site; develop a commercial corridor and provide microenterprise assistance to businesses that locate on or near the site; create partnerships with nonprofits for maintaining and governing the

new community; provide homeownership assistance to resettlement participants; and dispose of real property on the island.

The formal public comment period for Action Plan Amendment 5 begins today, April 8, 2019 and continues until 5 p.m. Tuesday, April 23, 2019. Residents, community leaders and elected officials can view the plan by clicking here and selecting the respective APA link.

5. OCD posted the above news release on the agency website April 8, 2019.

Summary of Public Comments and State's Response

OCD Note: The following comments relate to matters involving property on Isle de Jean Charles. They have been grouped and responded to collectively.

PUBLIC COMMENT: I am in favor of this project. The Isle de jean Charles residents have been the most discriminated people on the planet. These are the most resilient people I have ever known. They deserve to be treated with care and respect. I STONGLY BELIEVE THAT THEY SHOULD NEVER,NEVER, EVER HAVE TO GIVE UP THE RIGHTS TO THIER LAND TO MOVE INTO THIS NEW PROJECT. BLOOD WILL LEAK FROM MY EYES, MOUTH,NOSE AND EARS BEFORE I AGREE WITH THIS. The other low income residents who are coming into this project will have to give up NOTHING in order to live in this new development so why do the ISLE DEJEAN CHARLES INDIANS HAVE TO GIVE UP THEIR LAND THAT HAS BEEN THEIRS FOR CENTURIES BEFORE WE WERE EVER HERE? THIS IS DOWN RIGHT DISCRIMINATION AND I WON'T STAND FOR IT AND THEY WON'T HAVE IT EITHER. We have just bought some property near this location and I am all in on this project. What a wonderful new development in our sleepy little "God's Country community of Schriever. My daughter lives right across the street/bayou from this new development on the Church side of the bayou.We sold her that land to build her new home. We LOVE SCHRIEVER AND WE WELCOME THE INDIANS, BOTH THE ISLE DE JEAN CHARLES AND THE HOUMA INDIANS. I don't agree with the fact that the Houma Indians should use the grant money allocated and applied for and received by the Isle de jean Charles Tribe for their purpose. The Houma Indians should have applied for their own grant money and followed the same rules as the Isle de jean Charles tribe did. This is my opinion and I am sticking to it. I want both tribes to come to Schriever and anyone else who doesn't have a roof over their heads. We love all God's people here in our community and the more the merrier. What I won't tolerate is DISCRIMINATION AND TAKEING LAND FROM THE ISLE DE JEAN TRIBE, OR ANY TRIBE----LOOK UP DISCRIMINATION AND APPLY IT TO THIS PROJECT BECAUSE IF THIS IS NOT DONE FAIRLY ALL HELL WILL BREAK LOOSE AND I AM NOT KIDDING. THESE INDIANS HAVE SUFFERED OVER AND OVER AGAIN AND ENOUGH IS ENOUGH!! I really like what I have seen so far about this project. I am looking forward to it and to the people who will be moving here. We have a wonderful little community here and I can't wait to see it grow bigger and better than it is now. I am looking forward for both Indian tribes to come here and perhaps later down the road they could both open gift shops and sell their home made artifacts and increase tax revenue for the Parish to grow to leaps and bounds. Also, school kids could be bussed into the community to learn first hand how the Indians survived and made America what it is today. After all they were here 1ST. and the rest of us followed and we ran them off their land into reservations and you know the rest of the history. HAVEN'T WE DISCRIMINATED AGAINST THE INDIANS ENOUGH ALREADY? CAN'T WE BE BETTER THAN THAT AND ACCOMPLISH THE SAME RESOLVE WITHOUT THE CONTINUED DISCRIMINATION WITH ALL OF US INVOLVED BEING PART OF THAT? WELL, I CAN TELL YOU THIS ONE I AM A 72 YEAR OLD WOMAN AND I WEIGH ONLY 110 LBS BUT I WILL FIGHT UNTIL I DROP TO STOP THIS DISCIMINATION NOW!! I want to see this development be an example and the best project ever accomplished and finished by the Community Development Dept. for the State of Louisiana that was ever completed and done fairly and with class. Thanks for letting me comment and I stand behind every single word I wrote. I am not an average Jane and I HATE DISCRIMINATION NO MATTER WHO IT IS AGAINST. GOD BLESS SCHRIEVER, THE INDIANS AND ALL THE PEOPLE IN GOVERNMENT OFFICES WHO HAVE TO MAKE IMPORTANT DECISIONS EACH DAY THAT INPACT EVERYONES LIVES. WHAT A HELL OF A JOB YOU PEOPLE HAVE ON YOUR SHOULDERS, SO MAY GOD BE WITH ALL OF YOU!!!! REMEMBER: ELECTION IS RIGHT AROUND THE CORNER SO LET YOUR VOICE BE HEARD LOUD AND CLEAR---GO VOTE!!

PUBLIC COMMENT: Here are my comments about this unfair project: First and foremost, I understand that the Isle de jean Charles Indians will have to give up the legal rights to their land or at least what is left of it on the island in order to become a resident in the new Schriever development. That is discrimination, plain and simple and I won't stand for it, not yesterday, today or tomorrow.

Second, the low income people will move in here too and I want all of them that don't have a roof over their head to come in this project because we love all God's people here in Schriever. The only difference with these people, they have NOTHING to give up to move in so how can you discriminate against the Indians and treat them differently than the low income people? Let me be completely straight with you head honchos=====it ain't gonna happen on my watch!!! The Indians have been the most discriminated on people on this planet. The Indians, all tribes, settled here before we all got here and when we got here we forced them onto reservations and the rest is history. It ain't gonna happen all over again with this project. Grab on to something and hold on tight because we will fight for fairness FOR ALL!

I saw the new plans of this development and it is a BEAUTIFUL design and there are so, so, many GOOD ideas in the design but unless EVERYONE IS TREATED FAIRLY, THEN YOU CAN SHUT THE WHOLE THING DOWN. The people in our sleepy little God's Country town of Schriever are good, decent, fair, loving people and would never want to hurt anyone's feeling by discriminating against any one of them.

These down the bayou Indians have lost just about everything year after year, flood after flood and NEVER ASKED FOR ANYTHING.

THEY ARE THE MOST RESILIENT PEOPLE I HAVE EVER KNOWN.

I live in Schriever and my daughter lives right across the bayou from this new proposed development so we are very excited to see it be done right and fairly for ALL residents.

I would love to see this project become the best project the State of Louisiana ever developed. Haven't the Indians been discriminated on enough? Can't we do better than that and fix this once and for all and be known for getting it right and doing the right thing on their behalf, finally, after all these years

LET'S BEGIN WITH MAKING A NEW HISTORY AND WHAT BETTER PLACE TO START THAN IN SCHRIEVER WITH THIS PROJECT? ONE THAT ANYONE FROM ANY PART OF THE UNITED STATES COULD BE PROUD OF===NOW HEAD HONCHOS WHEN THAT IS ACCOMPLISHED====STAND TALL AND BE RECOGNIZED UNTIL THEN, GO BACK TO THE DRAWING BOARD AND CHANGE THEM RULES ABOUT TAKEING THE INDIANS LAND FROM THEM, ESPECIALLY THE LAND THAT HAS BEEN IN THIER FAMILY FOR CENTURIES, EVEN BEFORE YOU EVER CAME HERE AND GOT YOURSELVES ELECTED, APPOINTED OR SELECTED TO THIS JOB YOU HOLD THAT GAVE YOU THE RIGHT TO MAKE THE FINAL DECISIONS ON THIS DEVELOPMENT. I KNOW YOU ALL HAVE VERY DIFFICULT DECISONS TO MAKE AND I PRAY THAT YOU ALL MAKE GOOD ONES AND FAIR CALLS, IF NOT, MAY GOD HAVE MERCY ON ALL OF YOU!!
THANKS FOR LETTING ME EXPRESS MY OPINION,

OCD RESPONSE: Thank you for your comment on the State of Louisiana's proposed Action Plan Amendment 5 for the resettlement of the residents of Isle de Jean Charles. As described in the Amendment, OCD has no desire or intention to acquire land on Isle de Jean Charles. The state's intention, as stated in the original application and restated in Action Plan Amendment 5, is to leave the Island properties in the hands of the owners for their future use. To accomplish this goal, while also remaining compliant with applicable federal regulations, OCD has proposed two legal options for property owners to choose from in exchange for Resettlement assistance:

Option 1 — A mortgage on the property; or
Option 2 — A deed restriction in the form of an easement, also known as a "servitude" under Louisiana law.

These legal commitments will allow program participants continued use of island property for non-residential purposes, including recreational, cultural and/or historic purposes. Deeds for on-Island properties will remain with current landowners. Former and current island residents who do not own island property will enter into a personal grant agreement that limits their current or future use of any island property to non-residential purposes.

It is important to note the mortgage proposed under the first option will not require payment unless a program participant uses the property as a permanent residence, or otherwise engages in activities to further develop or transact that property – activities that run counter to the premise of community resettlement. In effect, this instrument is used to maintain current on-Island conditions – including continued use of property and structures erected on those properties – while also accomplishing the goal of voluntarily relocating permanent residents to higher, drier, safer ground.

For current information on the Resettlement's status, please visit www.isledejeancharles.la.gov. Additionally, do not hesitate to contact OCD if you have any additional questions or comments regarding this initiative.

OCD Note: The following comments relate to matters regarding the state's National Disaster Resilience Competition application, program activities undertaken to this point, and planned activities referenced in APA #5.
They have been grouped and responded to collectively.

PUBLIC COMMENT: I am writing with regard to Amendment 5, changes to the resettlement plan. I support the original plan for a resilient resettlement, that "supports and enhances tribal identity, sovereignty, and dignity". In particular, Amendment No. 5, if accepted by HUD, will erase the following key assurance made in the original NDRC application: "All factors of the design and process will help to support and enhance tribal identity, sovereignty and dignity" (pg 107 of NDRC awarded application). Amendment No. 5 presents a limited history of the Isle de Jean Charles Biloxi-Chitimacha-Choctaw Tribe, which state planners crafted without consulting the Isle de Jean Charles Biloxi-Chitimacha-Choctaw Tribal Council. As described in Amendment No. 5, the resettlement would exclude renters and discourage some residents on the Island due to their inability to "demonstrate financial ability to build a new home" or pay insurance fees and taxes on a new property, preventing them from moving to safety. Amendment No. 5 states, "The state will use program funding to make infrastructure improvements necessary for the development of the new community to include, but not limited to: streets, sewerage, water and other utilities, sidewalks, parks, etc. If funding is available, the program will also construct community center and/or other public facilities." (pg 10). This replaces a commitment in the original application to build a distinct tribal community center: "A Community Center is planned as part of the development, serving as an anchor and gathering place for the tribe" (pg. 107 of NDRC awarded application).

PUBLIC COMMENT: To whom it may concern, I'm writing to ask that Amendment No. 5 be reconsidered so that it supports the original plan for a resilient resettlement as indicated by the Isle de Jean Charles Tribe in their National Disaster Resilience competition application. As they were awarded this application, their resettlement **must support and enhance tribal identity, sovereignty, and dignity** as they have decided. Any weakening of this, as Amendment No. 5 does, is an insult to their tribal sovereignty and a further disgrace of the settler colonial state that occupies this stolen land that makes up the United States.

People must not be excluded because of their inability to pay-- this is an environmental crisis that is not of their doing, and they deserve the right to stay together as a community and as a sovereign indigenous tribe

in their resettlement. Also, since their application award permitted the creation of a distinct community center for the Isle de Jean Charles Tribe, they must be given this in their new settlement!

Amendment No. 5 makes a mockery of the work that Isle de Jean Charles has done to protect their community as rising waters threaten to consume it.
Thank you for your consideration.
Do what is just.

PUBLIC COMMENT: I urge the state to refocus your approach to the Isle de Jean Charles Resettlement and require state planners and policy-makers honor the rights of the tribe as you did throughout the NDRC grant proposal-writing process prior to receiving federal funding. The members of the Biloxi-Chitimacha-Choctaw tribe are long-standing rights-holders in this process, committed to future generations of their families, their knowledge, their ways of life, and their people. The Tribe's cultural survival depends on it.
I URGE YOU TO REJECT AMENDMENT NO. 5

Amendment No. 5, REJECT this! Do not erase the following key assurance made in the original NDRC application: "All factors of the design and process will help to support and enhance tribal identity, sovereignty and dignity" (pg 107 of NDRC awarded application).

Amendment No. 5 presents a limited history of the Isle de Jean Charles Biloxi-Chitimacha-Choctaw Tribe, which state planners crafted without consulting the Isle de Jean Charles Biloxi-Chitimacha-Choctaw Tribal Council.

How could you do this? What about your role as public servants in a democracy??? IT'S A VIOLATION OF THE CIVIL RIGHTS OF THE TRIBAL MEMBERS. WHO'S NEXT?

As described in Amendment No. 5, the resettlement would exclude renters and discourage some residents on the Island due to their inability to "demonstrate financial ability to build a new home" or pay insurance fees and taxes on a new property, preventing them from moving to safety.

THAT IS CLEARLY DISCRIMINATION AND IT IS REPREHENSIBLE.

Amendment No. 5 states, "The state will use program funding to make infrastructure improvements necessary for the development of the new community to include, but not limited to: streets, sewerage, water and other utilities, sidewalks, parks, etc. If funding is available, the program will also construct community center and/or other public facilities." (pg 10). This replaces a commitment in the original application to build a distinct tribal community center: "A Community Center is planned as part of the development, serving as an anchor and gathering place for the tribe" (pg. 107 of NDRC awarded application).

AS DIRECTOR OF THE NEA FUNDED CITIZENS' INSTITUTE ON RURAL DESIGN WE FACILIATED A 3 DAY WORKSHOP WITH TRIBE IN OCTOBER OF 2016 SPECIFICALLY FOCUSED ON THE DESIGN ANDPLANNING FOR A NEW COMMUNITY CENTER.

BY ENFORCING THIS AMENDMENT YOU ARE COUNTERMANDING A PROGRAM FUNDED BY THE FEDERAL GOVERNMENT. DO YOU REALLY WANT TO GO THERE?

SUCH CRUEL AND HEARTLESS AMENDMENTS AND LEGISLATION WILL NOT GO UNNOTICED.
REJECT AMENDMENT NO 5. DO IT NOW.

PUBLIC COMMENT: Hello, I am writing to express my deep concern about amendment 5, the latest in our country's disgraceful history of broken promises and outright genocide against native peoples. The cultural survival of this tribe should be at the center of this process and they should be included every step of the way. I share their points of concern:

- Amendment No. 5, if accepted by HUD, will erase the following key assurance made in the original NDRC application: "All factors of the design and process will help to support and enhance tribal identity, sovereignty and dignity" (pg 107 of NDRC awarded application).
- Amendment No. 5 presents a limited history of the Isle de Jean Charles Biloxi-Chitimacha-Choctaw Tribe, which state planners crafted without consulting the Isle de Jean Charles Biloxi-Chitimacha-Choctaw Tribal Council.
- As described in Amendment No. 5, the resettlement would exclude renters and discourage some residents on the Island due to their inability to "demonstrate financial ability to build a new home" or pay insurance fees and taxes on a new property, preventing them from moving to safety.
- Amendment No. 5 states, "The state will use program funding to make infrastructure improvements necessary for the development of the new community to include, but not limited to: streets, sewerage, water and other utilities, sidewalks, parks, etc. If funding is available, the program will also construct community center and/or other public facilities." (pg 10). This replaces a commitment in the original application to build a distinct tribal community center: "A Community Center is planned as part of the development, serving as an anchor and gathering place for the tribe" (pg. 107 of NDRC awarded application).

Please take immediate and decisive action to support the original plan for a resilient resettlement on the tribe's terms.

PUBLIC COMMENT: Please honor the original plan for resilient resettlement for Isle de Jean Charles Biloxi-Chitimacha-Choctaw Indians. I do not agree with Amendment 5 or the lack of transparency on the changes without community involvement.

PUBLIC COMMENT: I am appalled that Amendment #5 would apparently allow the State of Louisiana to control the relocation process without the substantive involvement of the tribal communities that have resided there for generations. Relocation must have the objective of supporting and enhancing the ability of tribal communities to govern themselves and involve measures to maintain the socio-economic-cultural continuity and integrity of tribal communities. It is imperative that the State respect and work collaboratively with the tribal governments of Isle de Jean Charles and urge that the amendment clearly indicate its intent to do so.

PUBLIC COMMENT: Please honor the original resilient resettlement of Isle de Jean Charles band of Biloxi-Chitimacha-Choctaw Tribe not what Is currently outlined in amendment 5. Keep your word. Thank you.

PUBLIC COMMENT: To whom it may concern,
As a Louisiana resident, I am concerned with the Amendment 5 changes to the resettlement plan for the Isle de Jean Charles Biloxi-Chitimacha-Choctaw Indians of Louisiana. I do not support Amendment 5 changes, and encourage the state of Louisiana to work with tribal leadership on enacting the original resettlement plan. A resilient recovery must prioritize tribal cultural survival, & MUST include input from the tribe at all times.

PUBLIC COMMENT: I oppose Amendment # 5 and demand the state planners and policy makers honor our rights as they did throughout the NDRC grant proposal writing process. We are long standing rights holders in this process. Our tribe's cultural survival depends on the original plan that the grant was awarded for.

PUBLIC COMMENT: I oppose Amendment # 5 and demand the state planners and policy makers honor our rights as they did throughout the NDRC grant proposal writing process. We are long standing rights holders in this process. Our tribe's cultural survival depends on the original plan that the grant was awarded for not the state's new plans.

PUBLIC COMMENT: 23 April 2019, Dear Sirs/Madam, I am registering a comment on the new additions and changes in Amendment No.5 of the National Disaster Resilience Competition - as these proposed amendments erase key elements of the NDRC.

The proposed Amendment No. 5 replaces the section in the National Disaster Resilience Competition that describes the state's commitment to supporting long-standing tribal-driven efforts to reunite the Island people and rejuvenate the Island lifeways.

- Amendment No. 5, if accepted by HUD, will erase the following key assurance made in the original NDRC application: "All factors of the design and process will help to support and enhance tribal identity, sovereignty and dignity" (pg 107 of NDRC awarded application).
- Amendment No. 5 presents a limited history of the Isle de Jean Charles Biloxi-Chitimacha-Choctaw Tribe, which state planners crafted without consulting the Isle de Jean Charles Biloxi-Chitimacha-Choctaw Tribal Council.
- As described in Amendment No. 5, the resettlement would exclude renters and discourage some residents on the Island due to their inability to "demonstrate financial ability to build a new home" or pay insurance fees and taxes on a new property, preventing them from moving to safety.
- Amendment No. 5 states, "The state will use program funding to make infrastructure improvements necessary for the development of the new community to include, but not limited to: streets, sewerage, water and other utilities, sidewalks, parks, etc. If funding is available, the program will also construct community center and/or other public facilities." (pg 10). This replaces a commitment in the original application to build a distinct tribal community center: "A Community Center is planned as part of the development, serving as an anchor and gathering place for the tribe" (pg. 107 of NDRC awarded application).

Thank you for maintaining the integrity of the Isle de Jean Charles application and doing your best to fulfill the protections requested by the Biloxii-Chitimacha-Choctaw Tribal Council. This is an opportunity for Louisiana to lead the rest of the nation.

PUBLIC COMMENT: I am writing to express solidarity with the Isle de Jean Charles tribe. All plans for resettlement should center their cultural survival, and the plan for resilient settlement should be honored. To this end, you must drop Amendment 5.

PUBLIC COMMENT: I object to "Amendment #5: Introductions of new activities and project narrative clarifications", in reference to the resettlement of the residents of Isle de Jean Charles. I support the original plan for a resilient resettlement, that supports and enhances tribal identity, sovereignty, and dignity. I have lived in the community and know that the Isle de Jean Charles band of BCC has never been affiliated with UHN as insinuated in the amendment. Their original request should be honored.

PUBLIC COMMENT: To Whom It May Concern, I am submitting this public comment in response to the States release of "Amendment #5: Introductions of new activities and project narrative clarifications" for the resettlement of Isle de Jean Charles. I object to this amendment.

I support the original plan for a resilient resettlement that supports and enhances tribal identity, sovereignty, and dignity. I have lived in the community and know that the Isle de Jean Charles Band of BCC has never been affiliated with UHN as insinuated in the amendment. Please honor the original request.

PUBLIC COMMENT: To whom it may concern, My name is Melissa Watson and I am a citizen and resident of Louisiana, and a registered voter. I strongly object to the changes proposed by Amendment No. 5 of the IDJC action plan, as they erase certain tribal interests, listed below:
The erasure of "All factors of the design and process will help to support and enhance tribal identity, sovereignty and dignity" (pg 107 of NDRC awarded application).

The exclusion of residents who do not "demonstrate financial ability to build a new home."

The addition of, "The state will use program funding to make infrastructure improvements necessary for the development of the new community to include, but not limited to: streets, sewerage, water and other utilities, sidewalks, parks, etc. If funding is available, the program will also construct community center and/or other public facilities." (pg 10). This replaces a commitment in the original application to build a distinct tribal community center: "A Community Center is planned as part of the development, serving as an anchor and gathering place for the tribe" (pg. 107 of NDRC awarded application).

PUBLIC COMMENT: We support the Isle de Jean Charles Biloxi-Chitimacha-Choctaw and denounce any attempt to undermine their sovernity, such as Amendment #5.

PUBLIC COMMENT: We support the recognition of the traditional sovereignty and territory of the Isle de Jean Charles Biloxi-Chitimacha-Choctaw.

PUBLIC COMMENT: Cultural Survival, a non-profit Indigenous rights organization based in Cambridge, Massachusetts, stands in solidarity with the the Isle de Jean Charles Band of Biloxi-Chitimacha-Choctaw Tribe in their condemnation of the state of Louisiana's creation and submission of Amendment No.5: Introduction of New Activities and Project Clarifications to the U.S. Department of Housing and Urban Development on April 23, 2019. In 2015 the Department of Housing and Urban Development's National Disaster Resilience Competition awarded the state of Louisiana $48 million to assist the Tribe in the implementation of a tribal resettlement process given that subsidence, erosion, flooding, and hurricane damage have prevented the Isle de Jean Charles from remaining a safely habitable landmass. The Isle de Jean Charles Band of Biloxi-Chitimacha-Choctaw Tribe partnered with Louisiana's Office of Community Development in a collaborative effort to ensure the resettlement process would prioritize the safe relocation of the island's residents, adhere to tribal sovereignty and self-determination in the decision making process, and permit continued access to the Isle de Jean Charles in order to maintain vital connections to the tribe's cultural and familial history. In January 2019 the Isle de Jean Charles Band of Biloxi-Chitimacha-Choctaw Tribe publicly expressed fears that the State was beginning to replace them as the central authority in the resettlement process and steadily phase out the Tribe's ability to make autonomous decisions. Amendment No.5 is tangible proof that the State has veered away from its commitment to respect the Tribe's role in this process and has forged ahead with changes that violate components of the original grant proposal. The Amendment states that "the Resettlement team is committed to implementing the relocation process in a manner that emphasizes residents' self-determination. Guided by an understanding of their expressed priorities, needs and concerns, the new settlement will reflect the Isle de Jean Charles community's values, cultural affiliations and economic objectives." Analysis of the Amendment's proposed changes, however, directly contradict this statement. The original National Disaster Resilience Competition awarded application dictates that "a Community Center is planned as part of the development, serving as an anchor and gathering place for the tribe. It is intended to be a point of contact with the land, a place for meetings, rituals and evolution of site

development" (107). Amendment No. 5, however, declares "the state will use program funding to make infrastructure improvements necessary for the development of the new community to include, but not limited to: streets, sewerage, water and other utilities, sidewalks, parks, etc. If funding is available, the program will also construct community center and/or other public facilities" (10). The state has thus renounced their commitment to installing a structure meant to serve as the social and cultural nucleus of the Tribe's new home, a structure whose creation was explicitly guaranteed in the original application. Eligibility for property on the new land is largely dependent on the tribal residents' "financial ability" (10), place of residence during Hurricane Isaac, and capacity to pay insurance fees and taxes on the new property. While members of the Tribe must overcome these technical and financial barriers, the Amendment establishes that "any unused lots in the new community will be made available to the public through other housing programs or public auction for residential housing development" (10). This directly encroaches on the Tribe's sovereign governing space and appropriates land and funds designed for tribal resettlement to the public domain. Amendment No.5 attempts to present historical background of the American Indian Ancestry on the Isle de Jean Charles, but fails to outline the full breadth of the Tribe's historical timeline. Additionally, the state did not consult the Tribe when drafting the limited documentation of the Tribe's history. Lastly, the original National Disaster Resilience Competition application states "all factors of the design and process will help to support and enhance tribal identity, sovereignty and dignity" (107). Amendment No.5, if adopted by the Department of Housing and Urban Development, abolishes this declaration through its multifaceted approach to dominating the tribal resettlement process. Cultural Survival supports the Isle de Jean Charles Band of Biloxi-Chitimacha-Choctaw Tribe in their commitment to restructuring the state's approach to the resettlement process in order to reallocate key decision making power to the Tribe. We reiterate the position of the Isle de Jean Charles Band of Biloxi-Chitimacha-Choctaw Tribe in advocating for the complete negation of Amendment No.5 and for documentation that guarantees the implementation of all components put forth in the original grant application. The cultural survival as well as economic and social livelihood of the Isle de Jean Charles Band of Biloxi-Chitimacha-Choctaw Tribe depends on their sovereign right to be the key decision maker in this historical resettlement process.

PUBLIC COMMENT: Cultural Survival, a non-profit Indigenous rights organization based in Cambridge, Massachusetts, stands in solidarity with the the Isle de Jean Charles Band of Biloxi-Chitimacha-Choctaw Tribe in their condemnation of the state of Louisiana's creation and submission of Amendment No.5: Introduction of New Activities and Project Clarifications to the U.S. Department of Housing and Urban Development on April 23, 2019. In 2015 the Department of Housing and Urban Development's National Disaster Resilience Competition awarded the state of Louisiana $48 million to assist the Tribe in the implementation of a tribal resettlement process given that subsidence, erosion, flooding, and hurricane damage have prevented the Isle de Jean Charles from remaining a safely habitable landmass. The Isle de Jean Charles Band of Biloxi-Chitimacha-Choctaw Tribe partnered with Louisiana's Office of Community Development in a collaborative effort to ensure the resettlement process would prioritize the safe relocation of the island's residents, adhere to tribal sovereignty and self-determination in the decision making process, and permit continued access to the Isle de Jean Charles in order to maintain vital connections to the tribe's cultural and familial history. In January 2019 the Isle de Jean Charles Band of Biloxi-Chitimacha-Choctaw Tribe publicly expressed fears that the State was beginning to replace them as the central authority in the resettlement process and steadily phase out the Tribe's ability to make autonomous decisions. Amendment No.5 is tangible proof that the State has veered away from its commitment to respect the Tribe's role in this process and has forged ahead with changes that violate components of the original grant proposal. The Amendment states that "the Resettlement team is committed to implementing the relocation process in a manner that emphasizes residents' self-determination. Guided by an understanding of their expressed priorities, needs and concerns, the new settlement will reflect the Isle de Jean Charles community's values, cultural affiliations and economic objectives." Analysis of the Amendment's proposed changes, however, directly contradict this statement. The original National Disaster Resilience Competition awarded application dictates that "a Community

Center is planned as part of the development, serving as an anchor and gathering place for the tribe. It is intended to be a point of contact with the land, a place for meetings, rituals and evolution of site development" (107). Amendment No. 5, however, declares "the state will use program funding to make infrastructure improvements necessary for the development of the new community to include, but not limited to: streets, sewerage, water and other utilities, sidewalks, parks, etc. If funding is available, the program will also construct community center and/or other public facilities" (10). The state has thus renounced their commitment to installing a structure meant to serve as the social and cultural nucleus of the Tribe's new home, a structure whose creation was explicitly guaranteed in the original application. Eligibility for property on the new land is largely dependent on the tribal residents' "financial ability" (10), place of residence during Hurricane Isaac, and capacity to pay insurance fees and taxes on the new property. While members of the Tribe must overcome these technical and financial barriers, the Amendment establishes that "any unused lots in the new community will be made available to the public through other housing programs or public auction for residential housing development" (10). This directly encroaches on the Tribe's sovereign governing space and appropriates land and funds designed for tribal resettlement to the public domain. Amendment No.5 attempts to present historical background of the American Indian Ancestry on the Isle de Jean Charles, but fails to outline the full breadth of the Tribe's historical timeline. Additionally, the state did not consult the Tribe when drafting the limited documentation of the Tribe's history. Lastly, the original National Disaster Resilience Competition application states "all factors of the design and process will help to support and enhance tribal identity, sovereignty and dignity" (107). Amendment No.5, if adopted by the Department of Housing and Urban Development, abolishes this declaration through its multifaceted approach to dominating the tribal resettlement process. Cultural Survival supports the Isle de Jean Charles Band of Biloxi-Chitimacha-Choctaw Tribe in their commitment to restructuring the state's approach to the resettlement process in order to reallocate key decision making power to the Tribe. We reiterate the position of the Isle de Jean Charles Band of Biloxi-Chitimacha-Choctaw Tribe in advocating for the complete negation of Amendment No.5 and for documentation that guarantees the implementation of all components put forth in the original grant application. The cultural survival as well as economic and social livelihood of the Isle de Jean Charles Band of Biloxi-Chitimacha-Choctaw Tribe depends on their sovereign right to be the key decision maker in this historical resettlement process.

PUBLIC COMMENT: I am writing to express my **strong opposition to Amendment 5** of the Isles de Jean Charles resettlement action plan. This amendment strips away several important promises made to the tribe and significantly changes plans that were included in the original application for the HUD award, namely:
Amendment No. 5, if accepted by HUD, will erase the following key assurance made in the original NDRC application: "All factors of the design and process will help to support and enhance tribal identity, sovereignty and dignity" (pg 107 of NDRC awarded application).

Amendment No. 5 presents a limited history of the Isle de Jean Charles Biloxi-Chitimacha-Choctaw Tribe, which state planners crafted without consulting the Isle de Jean Charles Biloxi-Chitimacha-Choctaw Tribal Council.

As described in Amendment No. 5, the resettlement would exclude renters and discourage some residents on the Island due to their inability to "demonstrate financial ability to build a new home" or pay insurance fees and taxes on a new property, preventing them from moving to safety.

Amendment No. 5 states, "The state will use program funding to make infrastructure improvements necessary for the development of the new community to include, but not limited to: streets, sewerage, water and other utilities, sidewalks, parks, etc. If funding is available, the program will also construct community center and/or other public facilities." (pg 10). This replaces a commitment in the original application to build a distinct tribal community center: "A Community Center is planned as part of the development, serving as an anchor and gathering place for the tribe" (pg. 107 of NDRC awarded application).

Since our State has hugely benefited from oil revenue, we must ensure that we hold to our promises made to the tribe whose existence has suffered greatly the consequences caused by our oil production endeavors. Moreover, it would be unethical to change allocations of the money from what was included in the original application that received funding from HUD.

PUBLIC COMMENT: We the Tribes of the First People's Conservation Council (F.P.C.C.), have watched very carefully the interaction of the state of Louisiana and the Isle de Jean Charles-Biloxi-Chitimacha-Choctaw Tribe (IdJC-BCC) as they negotiated the re-settlement vision outlined in the HUD approved proposal. Louisiana had been given the chance to participate in a project which would have inspired global interest, in not only assisting her citizens out of harms way as they face the increasing threat to life by climate and human induced events; but Louisiana was given the opportunity to assist her "FIRST" citizens to preserve their history, their culture and honor their contributions to this home state.

Today (4/23/19) our hopes for this re-settlement has been replaced with disdain; disdain directed toward the state and her actors, who have at every turn circumvented the vision, authority and leadership of IdJC-BCC. In our estimation, the Tribe's interest has never been served and the state methods of dealing with them is shameful if not more.

We believe this eleventh-hour proposed, Amendment #5, is the blatant continuation by the state to further remove the Tribe's voice and leadership in the HUD resettlement proposal for the IdJC-BCC, and is self-serving at best. **We, the Tribal Communities of the FPCC, object to the Amendment #5 and all that it propose.** We stand in solidarity with Isle de Jean Charles-Biloxi Chitimacha Choctaw Tribe; and support the right of Self-Determination for the "FIRST" citizens of Louisiana and of this Nation.

PUBLIC COMMENT: Dear Louisiana State Planners, Please reconsider Amendment #5 as it breaches the previous relationship between the Isle de Jean Charles Resettlement and state planners. As was supported in the NDRC grant writing, it is critical that these folks, who have lost 98% of their land, have the opportunity to shape their future.

PUBLIC COMMENT: To whom it may concern,
I am writing to express my concern with the State of Louisiana Substantial Amendment No. 5. Most of all I am concerned that the Isle de Jean Charles Biloxi-Chitimacha-Choctaw Tribal Council is not satisfied with the present language. Specifically:

- Amendment No. 5, if accepted by HUD, will erase the following key assurance made in the original NDRC application: "All factors of the design and process will help to support and enhance tribal identity, sovereignty and dignity" (pg 107 of NDRC awarded application).
- Amendment No. 5 presents a limited history of the Isle de Jean Charles Biloxi-Chitimacha-Choctaw Tribe, which state planners crafted without consulting the Isle de Jean Charles Biloxi-Chitimacha-Choctaw Tribal Council.
- As described in Amendment No. 5, the resettlement would exclude renters and discourage some residents on the Island due to their inability to "demonstrate financial ability to build a new home" or pay insurance fees and taxes on a new property, preventing them from moving to safety.
- Amendment No. 5 states, "The state will use program funding to make infrastructure improvements necessary for the development of the new community to include, but not limited to: streets, sewerage, water and other utilities, sidewalks, parks, etc. If funding is available, the program will also construct community center and/or other public facilities." (pg 10). This replaces a commitment in the original application to build a distinct tribal community center: "A Community Center is planned as part of the development, serving as an anchor and gathering place for the tribe" (pg. 107 of NDRC awarded application).

Thank you for your consideration.

PUBLIC COMMENT: To whom it may concern, I would like to submit my support for the original vision and work of the Isle de Jean Charles Tribe. The Tribe has been working for a generation to have a viable sustainable community. Their vision of a sustainable, zero carbon design with technology that links historical cultural practices with future innovations that make for resilient coastal communities. The Tribe wanted to use their time and abilities to try all the best practices possible to be a living model and a living evaluative community to see how best practices play together, and enhance and rejuvenate a highly at risk region. The lack of incorporating the members of the Tribe in all the dimensions of work (actual hands-on work) from the time of the HUD award is in itself a denial of the building of capacity and the building of environmental and economic innovation for the Tribe. The best principles and practices of all federal agencies, professionals and academics were woven into the build out of the values the Tribe put forth for their vision. The work that achieved the HUD-NDRC award by Tribe and experts from around the world has been demeaned and dismissed by those who want to change the award by calling it ”aspirational” or “utopian”. Yet there are communities around the country that are working on zero carbon goals and best practices for addressing the extremes of climate- and they are lifted up as stellar and innovative. If the country and this region are to learn from stellar designs that are created and executed by local communities to lead for the future- cleaning our land, water and air and giving good food for the neighborhoods, mitigation in housing and land use- we are in desperate need of the original model for the submitted design/ideas from the Tribe. We all need to learn from the original design, the current work of the powers that be will not yield the leaning and sustainable exemplar community that was originally envisioned.

PUBLIC COMMENT: Good afternoon. Please recognize this email as an official public comment in reference to the National Disaster Resilience Competition Amendment #5 (Introductions of new activities and project narrative classification) regarding the relocation of the Isle de Jean Charles tribe from Island Road to higher ground.

I stand with the Isle de Jean Charles tribal community, including recognized Chief Albert White Buffalo Naquin, and their request for a resilient resettlement, that "supports and enhances tribal identity, sovereignty, and dignity."

I have worked with Chief Albert and other members of the Isle de Jean Charles tribe for over 8 years. I am one of the longstanding co-leaders of the New Orleans-based Building Resilience Workshop organization and we have consistently hosted members of the Tribe at our events since the earliest days of the organization in 2007. I can attest to Chief Albert's stamina and persistence for the survival and resilience of his community. Not only has Chief Albert been steadfast in his determination and hard work regarding his community's resettlement, going back way before the NDRC award, he has a network of others from within and outside of his community that have rallied around him and serve as a strong network of advocates and supporters.

A wonderful documentary was produced several years ago about the Tribe that outlines the evolution of their struggle(s) -- Can't Stop the Water. I would highly recommend that everyone at Louisiana OCD view this film, if possible.

The on-going Isle de Jean Charles resettlement process has been an ever-evolving vision and plan for the tribe. The HUD-NDRC program will make their dream a reality and without it, the survivability of a well-documented, (now) very high profile vulnerable community will be at greater risk.

Please reach out to me with any questions and/or clarifications about my comments. I am co-founder and CEO of a Louisiana-based boutique consulting firm that works at the intersection of community planning,

resilience, and cultural heritage. I have national experience working with communities like Isle de Jean Charles and have great hopes that they are able to see this effort through, with Louisiana OCD as a strong partner. What a tremendous opportunity to demonstrate the resilience, resolve, and creativity of the state of Louisiana.

PUBLIC COMMENT: I am writing to express my concern about the subject amendment. If adopted, Amendment 5 would contradict a critical component of the original National Disaster Resilience Competition application and award, to "support and enhance tribal identity, sovereignty, and dignity" of the Isle de Jean Charles Band of Biloxi-Chitimacha-Choctaw. If the community center is not constructed, as proposed in Amendment 5, the Tribe will lack a gathering place and physical anchor for the community. Amendment 5 would also exclude renters and discourage others with financial constraints, preventing them from moving to safety.

I urge the Louisiana Office of Community Development and the United State Department of Housing and Urban Development to reject Amendment 5.

Thank you for your consideration of these concerns.

PUBLIC COMMENT: I am writing as a scholar/teacher/advocate from the University of Wisconsin-Whitewater where I serve as Academic Staff Lecturer in Sociology. Since 2005 I have been researching the Gulf Coast post Katrina/Rita; I have met with members of the bayou communities and traveled to the area several times to see first-hand the destruction being wrought on the land and the tribes. I have written about their plight, their successful award of the resilience grant in 2016, and have been monitoring the whittling away of their sovereign rights. Deep connections have been made between the Gulf Coast communities and the Great Lakes region; there are many more people who are aware of the unjust process carried out by the state of Louisiana than may be understood. We stand together to support the original plan, which took over a decade of incredible collaborative work, to craft a resilient resettlement, that "supports and enhances tribal identity, sovereignty, and dignity." The original intent must be upheld to restore the voices of tribal leaders of the Isle de Jean Charles Band of the Biloxi-Chitimacha Choctaw.

PUBLIC COMMENT: PLEASE return to the original intent of the federal grant to resettle the people of Isle de Jean Charles. Do not be blind to the needs of this indigenous community that so desperately wants to stay together. I don't think that LA wants to be the reason for their demise after all of their history of survival and independence. They now need help, on their terms, not on the state's terms.

PUBLIC COMMENT: Hello, I respectfully request that the State of Louisiana and the Department of Housing and Urban Development honor the role of the Isle de Jean Charles Biloxi-Chitimaha-Choctaw Tribe as leaders in the resettlement process for their community and that the state and the department uphold the Tribe's wishes for how the process should take place, respecting Tribal sovereignty and dignity.
Thank you,

PUBLIC COMMENT: Since the HUD award was announced in early 2016, state planners have steadily erased the role of the Isle de Jean Charles Biloxi-Chitimacha-Choctaw as leaders of the resettlement process, excluded the leaders from decision-making, disregarded Tribal protocols during community engagement activities, and proposed they give up their Island home and that the new land be opened to public auction or to house other so-called "climate refugees" from throughout the coast. Moreover, planners have exacerbated tensions among family within the Tribe. The State released "Amendment #5: Introductions of new activities and project narrative clarifications" for the resettlement of Isle de Jean Charles. This amendment sets in stone the exclusion of the Tribe, and the changes that the State has been making throughout this process. 1. The proposed Amendment No. 5 replaces the section in the National Disaster

Resilience Competition that describes the state's commitment to supporting long-standing tribal-driven efforts to reunite the Island people and rejuvenate the Island lifeways. 2. Amendment No. 5, if accepted by HUD, will erase the following key assurance made in the original NDRC application: "All factors of the design and process will help to support and enhance tribal identity, sovereignty and dignity" (pg 107 of NDRC awarded application). 3. Amendment No. 5 presents a limited history of the Isle de Jean Charles Biloxi-Chitimacha-Choctaw Tribe, which state planners crafted without consulting the Isle de Jean Charles Biloxi-Chitimacha-Choctaw Tribal Council. 4. As described in Amendment No. 5, the resettlement would exclude renters and discourage some residents on the Island due to their inability to "demonstrate financial ability to build a new home" or pay insurance fees and taxes on a new property, preventing them from moving to safety. 5. Amendment No. 5 states, "The state will use program funding to make infrastructure improvements necessary for the development of the new community to include, but not limited to: streets, sewerage, water and other utilities, sidewalks, parks, etc. If funding is available, the program will also construct community center and/or other public facilities." (pg 10). This replaces a commitment in the original application to build a distinct tribal community center: "A Community Center is planned as part of the development, serving as an anchor and gathering place for the tribe" (pg. 107 of NDRC awarded application). It is crucial that the Isle de Jean Charles Biloxi-Chitimacha-Choctaw are leaders in this resettlement process.

PUBLIC COMMENT: I am writing as an Instructor and Sociologist at Madison Area Technical College in Madison, Wisconsin to comment on the plan for Isle de Jean Charles. Through the work of colleagues at the University of Wisconsin-Whitewater and beyond, I have become informed about the plight facing the Isle de Jean Charles Band of the Biloxi-Chitimacha Choctaw as waters encroach on their tribal lands. Their collective efforts to address the loss of their lands and to protect their culture and identity point to issues that extend beyond their one story to effect all of us as residents in the United States and as global citizens concerned about the effects of climate change. The State of Louisiana faces a choice either to support the original plan crafted over more than 10 years of collaborative work, which would "support and enhance tribal identity, sovereignty, and dignity" or to literally wash those efforts away and with it the cultural heritage of this Choctaw Band. I urge you in the strongest possible way to opt for the side of humanity, forward thinking about climate change, and social justice.

PUBLIC COMMENT: I stand in solidarity with the IDJC tribe and object to Substantial Amendment No. 5. The Sate of LA is reversing its commitment to honor the rights of the tribe, established during the NDRC grant proposal writing process, by purchasing new land and issuing Amendment #% without prior consultation with and participation of tribal members. The changes proposed in Amendment #5 fundamentally undermine the State's collaborative intent to ensure that "all factors of the design and process will help to support and enhance tribal identity, sovereignty and dignity," as stated in the NDRC award. The State's description of tribal history is truncated and presented without prior consultation with knowledgeable tribal members, thus making it at least partially inaccurate. Amendment #5 excludes the most vulnerable among tribal members (i.e., renters) from participating in the resettlement program and reneges on its commitment to include the building of a community center. Amendment #5 seems to imply that budget changes will be made without prior consultation with tribal members (p. 13). I strongly support the tribe's demand that the State of LA continue to honor its original commitment of close collaboration with the IDJC tribe in planning and implementing the original plan for a resilient resettlement that recognizes and respects tribal identity, sovereignty, dignity and rights.

PUBLIC COMMENT: As an American citizen I urge the state of Louisiana to re-open critical dialog with the Isle de Jean Charles Tribe immediately and delay major actions pending that consultation.

The role of the tribe in this process is central, and was integral to the HUD award in early 2016. State planners must re-instate tribal leaders in a meaningful and fully engaged role as leaders of the resettlement

process, included in all discussions and decision-making, and include Tribal protocols as indicated by tribal leaders during community engagement activities.
The lands designated for the tribe must retain their integrity. New lands should be dedicated to the tribal community as agreed to, rather than diluted through public auction or to house other so-called “climate refugees” from throughout the coast.

This community has been through enough trauma, and the current situation with the state has exacerbated tensions within the Tribe. As a concerned citizen I urge you to re-engage with the tribe, as above an in congruence with American democratic values.

Thank you for your attention to this matter.

PUBLIC COMMENT: I am writing to express my deep concern about the subject amendment. If adopted, Amendment 5 would contradict a most critical part of the original National Disaster Resilience Competition application and award, to "support and enhance **tribal identity, sovereignty, and dignity**" of the Isle de Jean Charles Band of Biloxi-Chitimacha-Choctaw. If the tribal center is not constructed, as proposed in Amendment 5, the Tribe will lack a gathering place and physical anchor for the community. Amendment 5 would also exclude renters and discourage others with financial constraints, preventing them from moving to safety. Frankly according to the genocide scholar Claudia Card (Card, Claudia (2010), *Confronting Evil: Terrorism, Torture, Genocide.* Oxford; Oxford University Press.) the action of the state amount to a serious form of genocide.

I urge the Louisiana Office of Community Development and the United State Department of Housing and Urban Development to reject Amendment 5.

PUBLIC COMMENT: To whom it may concern: I am writing as a teacher from the University of Wisconsin-Whitewater at Rock County where I serve as Faculty in Mathematics.

Since 2005, there has been continued destruction of the land and the tribes in the Gulf Coast post Katrina/Rita. The successful award to the tribes of the resilience grant in 2016 has, unfortunately, been offset by the gradual taking away of their sovereign rights. Deep connections have been made between the Gulf Coast communities and the Great Lakes region; there are many more people who are aware of the unjust process carried out by the state of Louisiana than may be understood.

We stand together to support the original plan, which took over a decade of incredible collaborative work, to craft a resilient resettlement, that "supports and enhances tribal identity, sovereignty, and dignity.”

The original intent must be upheld to restore the voices of tribal leaders of the Isle de Jean Charles Band of the Biloxi-Chitimacha Choctaw.

Thank you for your time and support.

PUBLIC COMMENT: I'd like to submit the following public comment: "As written, APA 5 represents a substantial departure from the initial intent of the HUD NDRC Application as submitted to HUD. I am concerned that the current framework does not provide for the reunification of the tribal community, including those who have previously left the island, nor does it provide adequate safeguards for those who chose to leave the Island. Furthermore, it does not appear to provide the same level of resilience and innovation that made the initial application as competitive as it was."

PUBLIC COMMENT: I am writing to express solidarity with the Isle de Jean Charles tribe. All plans for resettlement should center their cultural survival, and the plan for resilient settlement should be honored. To this end, you must drop Amendment 5.

PUBLIC COMMENT: To whom it may concern, I am writing to express solidarity with the Isle de Jean Charles tribe. All plans for resettlement should center their cultural survival, and the plan for resilient settlement should be honored. To this end, you must drop Amendment 5.

PUBLIC COMMENT: (Same comment submitted three times) Re: Comment on Substantial Amendment No. 5, National Disaster Resilience Competition Resettlement of Isle de Jean Charles Attn.: Ms. Janice Lovett, Louisiana Office of Community Development, Disaster Recovery Unit I am writing to express my serious concern about the State of Louisiana Substantial Amendment No. 5: Introduction of New Activities and Project Narrative Clarifications for the Utilization of Community Development Block Grant Funds Under the National Disaster Resilience Competition (NDRC) Resettlement of Isle de Jean Charles. To introduce the context from which I am writing this concern: I am the Associate Director of a non-profit organization, the Livelihoods Knowledge Exchange Network (LiKEN). In this capacity, I serve as the co-director of the Rising Voices: Climate Resilience through Indigenous and Earth Sciences program, co-administered by LiKEN and the University Corporation for Atmospheric Research/National Center for Atmospheric Research (UCAR/NCAR). Rising Voices facilitates intercultural approaches for understanding and adapting to extreme weather and climate events, variability, and change, working with tribal nations, leaders, and citizens across the United States. I also work for the Institute for Tribal Environmental Professionals, for which I work with Tribes across the country on climate change adaptation planning. Previously, I worked for the UN Development Programme and World Bank on resettlement, post-disaster needs assessments, and climate change, and for the US Global Change Research Program, including serving as an author on the 3rd and 4th US National Climate Assessments. My entré into this work was through my doctorate in public anthropology, which focused on the adaptation strategies of tribal communities in coastal Louisiana to environmental change and habitual disasters, and the complex socio-cultural-historical-ecological context within which the communities enact adaptation actions. Throughout my years of experiences in adaptation planning across Indian Country and other community contexts in the United States and internationally, the point of reference I always come back to, and which I share with communities across the globe is the vision, values, and planning efforts put forward by the Isle de Jean Charles Biloxi-Chitimacha-Choctaw (IDJC-BCC) Tribal Council and citizens. I have stood before political and agency leaders in Congressional hearings, in UN offices in Geneva, and engaged with tribal staff in their community spaces, and in all of these diverse contexts, the IDJC-BCC vision for their Tribe's cultural continuity and sustainability, planning for current and future generations, has been upheld as one of the cornerstone examples of how Indigenous and non-Indigenous communities can continue to survive, thrive, and adapt in the context of severe land loss and environmental shifts. The Tribe's vision, which has been applauded by tribal, political, and agency leaders from spaces in the far corners of Indian country to the halls of Congress to the tables of the United Nations, is the vision that was put forward and included in the State of Louisiana's submission to the National Disaster Resilience Competition (NDRC), which was awarded in 2016. It was a vision and plan for a resilient community that, as the awarded application stated "supports and enhances tribal identity, sovereignty, and dignity." As an anthropologist who carried out ethnographic research with the Isle de Jean Charles Tribe, the severely limited history of the Tribe that is included in Amendment No. 5 is not only disrespectful, but it disregards the actual long-history and standing of the Tribe, and does a disservice to the Tribe and the envisioned goal of the resettlement project that was awarded the NDRC funding. The lack of inclusion of Indigenous Knowledge, complete disregard of upholding the vision and plan put forward in the original awarded application, and the erasure of tribal identity, sovereignty, and dignity is an abusive disservice and gross negligence to the IDJC-BCC Tribe, and serves as a warning cry to all of the communities and leaders watching and listening closely. It is not an overstatement to say the world is watching what unfolds in this project. The State of Louisiana and HUD have been granted the opportunity to demonstrate what culturally

appropriate adaptation looks like in action – such as including tribal gathering space, capacity building, economic and environmental innovation for energy and food systems – that upholds community values and dignity, enabling a more sustainable outcome into the future. I urge the Louisiana Office of Community Development and the US Department of Housing and Urban Development to reject Amendment No. 5.

PUBLIC COMMENT: We would like to refocus the State's approach to the Isle de Jean Charles Resettlement and demand that state planners and policy-makers honor our rights, as they did throughout the NDRC grant proposal-writing process prior to receiving federal funding. We are long-standing rights-holders in this process, committed to future generations of our families, our knowledge, our ways of life, and our Island people. Our Tribe's cultural survival depends on it.

We ask that you and those who are making these changes do what is ethical and honorable: adhere to the original agreement and the plans. The monies were not earmarked for a HUD community but a tribal community where we can come together for our culture to survive.

PUBLIC COMMENT: I am writing to object to the exclusion of the Isle de Jean Charles Biloxi-Chitimacha-Choctaw tribe from the Amendment No.5 of the Utilization of Community Development Block Grant funds under the National Disaster Resilience Competition (NDRC) resettlement of Isla De Jean Charles.

It is a grievous error and injustice to the Isle de Jean Charles Biloxi-Chitimacha-Choctaw currently and to the tribe's ancestors and descendants. Tribal communities thrive when they can remain on their ancestral lands, which are sacred and life affirming for its members. The Isle de Jean Charles Biloxi-Chitimacha-Choctaw tribe has that sacred connection to the Isle de Jean Charles and to each other. The health and well-being of the tribal members depend upon maintaining that scared connection with the land and with each other. Excluding this tribe from the Community Development Block Grant funds under the NDRC resettlement of Isla de Jean is a travesty of justice and highlights the continued trauma inflicted upon Native American peoples who first inhabited these lands. It also reflects the ignorance and perhaps bias of the census gathering agents of the state of Louisiana. First Nation Peoples have formed alliances throughout their history and contemporary lives in order to survive as a people. A cursory look at the history of the First Nations Peoples of the Southeast would inform the committee on the different alliances and confederacies that were necessitated by natural and man-inflicted disasters. For example, please refer to the work of ethnohistorian Patricia Galloway on the formation of the Choctaw Confederacy as a result of the disasters that were perpetrated by the expedition of Hernando de Soto during the last years of his life. DeSoto died in 1542.

There are other studies available to support and augment the historical record of these formations and alliances of necessity following natural and man-inflicted disasters the Isle de Jean Charles Biloxi-Chitimacha-Choctaw represent a living example of a people who have come together to honor their connection to the land, tribal sacred traditions, their ancestors, and their resilience to disasters natural and man-inflicted. Consequently excluding the Isle de Jean Charles Biloxi-Chitimacha-Choctaw from the Community Development Block funds under the National Disaster Resilience Competition (NDRC) resettlement of Isla De Jean Charles constitutes a heinous crime of exclusion and continued trauma to a people of thousands of years of tribal resilience.

PUBLIC COMMENT: The Isle de Jean Charles Biloxi-Chitimacha-Choctaw, has lost over 98% of its traditional lands to erosion and subsidence in coastal Louisiana, and more than 75% of its people have been displaced over the last 65 years due to repeated storms and flooding. In 2002 the Tribal Council began planning the Tribe's resettlement inland to reunite its displaced people and revitalize their traditional ways of life. They have immense support but also faced some significant letdowns in trying to acquire resources for a Tribal-driven resettlement process. In 2015, they partnered with Louisiana's Office of Community Development,

working closely with you to include the Tribal resettlement in your successful application to the U.S. Department of Housing and Urban Development's (HUD) National Disaster Resilience Competition (NDRC). HUD awarded the State of Louisiana $48 million to support our Tribe's vision.

Since the HUD award was announced in early 2016, however, state planners have steadily erased the Tribe's role as leaders of the resettlement process, excluded its leaders from decision-making, disregarded Tribal protocols during community engagement activities, proposed they give up their Island home ***and that the new land be opened to public auction or to house other so-called "climate refugees" from throughout the coast. Moreover, planners have exacerbated tensions among family within our Tribe.***

In January 2019, **the Tribe learned - through the public press release - that the State completed the purchase of the new land**. Most recently, last week the Tribe received a public notice that the State released "**Amendment #5: Introductions of new activities and project narrative clarifications**" for the resettlement of Isle de Jean Charles. **This amendment sets in stone the exclusion of the Tribe**, and the changes that the State has been making throughout this process. Once again, the Tribe has been excluded from critical aspects of the planning process.

Regarding the Isle de Jean Charles Resettlement, I demand that state planners and policy-makers honor the Tribe's rights, as you did throughout the NDRC grant proposal-writing process prior to receiving federal funding. Tribe members are long-standing rights-holders in this process, committed to future generations of their families, knowledge, ways of life, and Island people. The Tribe's cultural survival depends on it. We all have much to learn from them about living in harmony with the natural world!
I ask you to support the original plan for a resilient resettlement that supports and enhances tribal identity, sovereignty, and dignity.

PUBLIC COMMENT: (Same comment sent two times) I urge the Louisiana Office of Community Development and the US Department of Housing and Urban Development to reject Amendment No. 5. Thank you for your time and consideration of the above concerns.

PUBLIC COMMENT: Support Tribes Original vision

PUBLIC COMMENT: (Same comment sent two times) The disregard for the Isle de Jean Charles Biloxi-Chitimacha-Choctaw tribe and their struggles over the last few years is astonishing. Please follow the original plan for a resilient resettlement. All over the country, people are standing in solidarity with this tribe. This tribe is deserving of a resettlement plan that preserves tribal identity, sovereignty, and dignity.

PUBLIC COMMENT: Boozhoo, As a member of the federally recognized Keweenaw Bay Indian Community, I request that you please honor the original vision and proposal of the Isle de Jean Charles Tribe. Sovereignty and intergovernmental negotiations are an important aspect of maintaining good relations with Tribal Nations throughout the country. Please make the right decisions regarding the Tribal people in your state.

PUBLIC COMMENT: (Same comment sent three times) I wish to show support for the original plan for a resilient resettlement that "supports and enhances tribal identity, sovereignty, and dignity

PUBLIC COMMENT: (Same comment sent twice) April 23, 2019 I am a member of the Pointe-au-Chien Indian Tribe and have paid close attention to the way the state has been interacting with the Isle de Jean Charles-Biloxi-Chitimacha-Choctaw Tribe as they negotiated the re-settlement vision outlined in the HUD approved proposal. Louisiana had been given the chance to assisting citizens of the Isle de Jean Charles-Biloxi-Chitimacha-Choctaw Tribe out of harms way as they face the threat to life by climate change, sea level rise and human induced events. Louisiana had the opportunity to assist the Isle de Jean Charles-Biloxi-

Chitimacha-Choctaw Tribe to preserve their history and their culture. Instead of assisting the Isle de Jean Charles-Biloxi-Chitimacha-Choctaw Tribe for this re-settlement, it was replaced with disrespect toward leadership of the tribe. I feel that the vision of the Isle de Jean Charles-Biloxi-Chitimacha-Choctaw Tribe has never been the interest of the state. It is shameful that our state is not willing to work with the Isle de Jean Charles-Biloxi-Chitimacha –Choctaw Tribe.

PUBLIC COMMENT: I would like to express grave concern regarding the proposed Substantial Amendment No. 5: Introduction of New Activities and Project Clarifications for the utilization of community development block grant funds under the National Disaster Resilience Competition (NDRC) Resettlement of the Isle de Jean Charles. This amendment, if approved, would replace some of the most essential and compelling commitments from the National Disaster Resilience Competition application, including the State of Louisiana's guarantee that, "All factors of design and process will help to support and enhance tribal identity, sovereignty, and dignity" (pp. 107). The amendment also replaces plans for a resilient tribal community center to serve "as an anchor and gathering place for the tribe" articulated in the successful NDRC phase II application (pp. 107). I am also concerned that the program described in the amendment does not provide a meaningful pathway for former Island residents who are currently renting off-Island and/or who do not have the means to finance a new house to join the resettlement, while also establishing a public auction option if lots remain unfilled.

I worry that all of the above will threaten the very essence, goals, and potential of this widely celebrated resettlement effort and the considerable federal investment by undercutting "a resilient and historically-contextual community." I also fear this substantial amendment might send a message to other community and tribal leaders along the coast that state and federal-sponsored resilience planning will become another site of social marginalization.

With these considerations in mind, I urge OCD and U.S. Department of Housing and Urban Development to reject Substantial Amendment No 5.

PUBLIC COMMENT: I think the state should honor its prior commitments to the people of Isle de Jean Charles and proceed with its original plans. Given the hardships already endured by the tribe, it is best if we respect their wishes.

PUBLIC COMMENT: There seems to be an inadequate amount of time and information made available by the State to enable citizens to make final comments on the proposed changes outlined in the "Substantial Amendment No. 5". The current master plan, likewise, does not provide enough information (to the public) for any person to be reasonably capable of making judgements about the suitability of the plans, and the proposed changes to the original NDRC award. Further, it seems that while members of the tribe, community, and long-time partners have worked for several years to develop the plans that led to the award of the NDRC grant, and while the tribe remains the "face" of the resettlement, their valuable voices are not being listened to, and the time commitment that the community has committed to this process, has been pushed aside.

PUBLIC COMMENT: As a scholar of disasters who teaches at University of Wisconsin-Whitewater, I am writing to support the sovereign rights of the tribal leaders of the Isle de Jean Charles Band of the Biloxi-Chitimacha Choctaw. This means support for the original plan, which took a decade to create, opposing the unjust process now being considered by the State of Louisiana. Tribal identity, sovereignty, and dignity, critical for the survival of the tribe, are key parts of this plan and must be protected.
Thank you for giving this your consideration,

PUBLIC COMMENT: I ask that the OCD - Disaster Recovery Unit please take into consideration the following aspects with regards to Amendment #5 for the Utilization of Community Development Block Grant Funds under the National Disaster Resilience Competition (NDRC) Resettlement of Isle de Jean Charles as they are violation of the NDRC federal grant application as was applied for and awarded for the Isle de Jean Charles Band of Biloxi-Chitimacha-Choctaw for tribal resettlement: The proposed Amendment No. 5 replaces the section in the National Disaster Resilience Competition that describes the state's commitment to supporting long-standing tribal-driven efforts to reunite the Island people and rejuvenate the Island life-ways thus violating the grant in the following, highly problematic ways: 1) Amendment No. 5, if accepted by HUD, will erase the following key assurance made in the original NDRC application: "All factors of the design and process will help to support and enhance tribal identity, sovereignty and dignity" (pg 107 of NDRC awarded application). 2) Amendment No. 5 presents a limited history of the Isle de Jean Charles Biloxi-Chitimacha-Choctaw Tribe, which state planners crafted without consulting the Isle de Jean Charles Biloxi-Chitimacha-Choctaw Tribal Council. 3) As described in Amendment No. 5, the resettlement would exclude renters and discourage some residents on the Island due to their inability to "demonstrate financial ability to build a new home" or pay insurance fees and taxes on a new property, preventing them from moving to safety. 4) Amendment No. 5 states, "The state will use program funding to make infrastructure improvements necessary for the development of the new community to include, but not limited to: streets, sewerage, water and other utilities, sidewalks, parks, etc. If funding is available, the program will also construct community center and/or other public facilities." (pg. 10). This replaces a commitment in the original application to build a distinct tribal community center: "A Community Center is planned as part of the development, serving as an anchor and gathering place for the tribe" (pg. 107 of NDRC awarded application). I ask that OCD - Disaster Recover Unit, Ms. Janice Lovett, and others involved in this issue please consider these grave violations of the original NDRC grant as awarded and their impacts on the population that they, as civil servants and public officers, are permitting by submitting such an Amendment as Amendment #5. Thank you.

PUBLIC COMMENT: Grand Bayou Indian Village is a Tribal community situated on Louisiana's southeastern coast in Plaquemines parish; and have been dealing with environmental issues like those of the Isle de Jean Charles Biloxi Chitimacha Choctaw. We support IdJC-BCC, in their endeavors to protect and unite their Tribal members. We celebrated the receipt of the HUD grant that would assist the Tribe in implementing their vision of becoming a whole community again. The IdJC-BCC application submission and vision that was submitted to HUD, was an integral part in the approval and funding of not only the portion allocated to the Tribe but played a significant role in the state's awarded portion.

What had been perceived as a victory for IdJC-BCC and the state of Louisiana is now perceived as a nightmare, not only by this Tribe but any Tribe in Louisiana who may face similar circumstances of relocation in the future.

The Tribe's authority and leadership has been usurped by state appointed overseers, and to date the Tribe has no control over the funding, the relocation, etc.; in fact, the Tribe's leadership has been divorced of all rights and their council is not sought. Whatever opposition they voice is either undermined by the interests of the other or is ignored outright.
The latest twist proposed by the state, Amendment #5, is the latest outrage to silence the voice of the IdJC-BCC leadership. **We stand with IdJC-BCC in opposition of Amendment #5.** We stand in amazement, of how the state and its actors can blatantly obliterate the approved version of the resettlement proposal and then replace it with something that goes contrary to the very precept of the original. We question, how can this injustice be allowed to continue?

Reject Amendment #5, restore the authority of the Isle de Jean Charles- Biloxi Chitimacha Choctaw Traditional leadership over this resettlement process. Reject Amendment #5.

PUBLIC COMMENT: Opposition of Substantial Amendment No. 5 The Grand Caillou/Dulac Band of Biloxi-Chitimacha-Choctaw has witnessed the Isle de Jean Charles Biloxi-Chitimacha-Choctaw Tribe's efforts to resettle their Tribal Community and have stood in solidarity with our brothers and sisters since the very beginning. Since the award has been granted, we have also witnessed the interaction of the state of Louisiana and the Isle de Jean Charles-Biloxi-Chitimacha-Choctaw Tribe as they negotiated the re-settlement vision outlined in the HUD approved proposal. What was to have been a grand opportunity to show the Nation and the World what true leadership, unity and resilience is and set precedent for other communities that may soon be facing resettlement themselves, this has become yet another shameful act by those in authority; further damaging the reputation of the State of Louisiana as it relates to its relationship with her First People's.
The Grand Caillou/Dulac Band of Biloxi-Chitimacha-Choctaw object to Amendment #5 and all that it proposes!

PUBLIC COMMENT: Tulane University School of Public Health and Tropical Medicine has been working with the Biloxi Chitimacha Choctaw Tribe of the Isle de Jean Charles. The Tribe first came to Louisiana 1830s when the Tribe escaped from the Indian Removal Act and settled on Isle de Jean Charles. Since that time, the Tribal identity and culture has been central to the cohesiveness of Tribal members as a community. The erosion of the island has made relocation essential; therefore, it is necessary that the Tribal identify and culture be maintained throughout this process. The relocation is more than the moving of individuals and building of new housing and buildings, but requires careful attention to maintaining the culture and cohesiveness of the Tribal community. In addition to the relocation of the individual tribal members, the community center is an essential gathering place to maintain the unity, identity and traditions of the tribe. With this background, Amendment #5 must take into account measures that support the Tribal identity and sovereignty. The relocation is about the Tribe. They are more than just stakeholders, this is the lifeline to keeping their tribal identify and culture and passing it along to their children. We have lost too much of Native American culture over the last century and this is a very rich history and culture that is essential to Louisiana. Keeping the Tribal leaders involved as the project moves forward is key to its success in maintaining the tribal traditions and providing the synergy make this a community rather than a mere collection of houses.

The Tribal leaders are uniquely placed to provide input on the actual needs of the tribal community. Not all in the Tribe are able to afford to build a new home, so the options for renting should not be excluded by the amendment. Whether this option is viable will need to be addressed in the future, however, it should not be excluded in the amendment. The Tribal organization of Biloxi Chitimacha Choctaw Tribe of the Isle de Jean Charles provides a structure for making the relocation project a real success. The Tribe has the capacity and energy to apply for other types of funding for traditional activities, public health initiatives, cultural preservation, and other major innovations that will elevate this project to the national centerpiece for relocation due to environmental factors. Tulane has worked with the Tribe on several initiatives and has been most impressed with the vision and tenacity of the Tribal members in trying to improve their people and preserve their culture.

We ask that you consider the various issues the Tribe has raised in Amendment #5 and take advantage of the knowledge of these essential stakeholders. All major projects have some difference of opinion, but the greater good of the community and the opportunity that is available to Louisiana should be a primary goal. Other issues can be worked out.

PUBLIC COMMENT: I attach a public comment on behalf of the Pointe-au-Chien Indian Tribe:
The Pointe-au-Chien Indian Tribe submits this comment to the LA Office of Community Development – Disaster Recovery Unit regarding Substantial Amendment No. 5 for utilization of CDBG Funds under the National Disaster Resiliency Competition to Resettle Isle de Jean Charles.

The Pointe-au-Chien Indian Tribe is concerned about the progress of and changes to the Resettlement Project made by the State of Louisiana. The changes to the Project undermine the Project's original intent and the self-determination of the Isle de Jean Charles Band of Biloxi-Chitimacha-Choctaw (IJC-BCCM). The Pointe-au-Chien Tribal Council passed a resolution in support of the Isle de Jean Charles Resettlement as envisioned by the Tribe. This resolution is attached hereto and incorporated into the Tribe's comment. As a Tribal Coastal Community that participated in the resiliency competition meetings, we were fully aware that IJC BCCM was the only Tribe that requested resettlement due to their history of exclusion from protection levees. The IJC-BCCM put together a project for the resiliency competition, and that project was selected. Everyone who participated in the meetings and who were following the competition knew that the IJC-BCCM spearheaded the application process. The State of Louisiana would not have received the funding for the project to resettle Isle de Jean Charles without the substantial effort and work put into the application by the IJC BCCM. In fact, the State agreed to partner with the IJC-BCCM on resettlement as part of this process. However, it seems now that the IJC BCCM is not even part of the process. Pointe-au-Chien is very concerned as to how these changes happened, the impact on resiliency and cultural heritage of the IJC BCCM people, and the self-determination of the IJC-BCCM. On page 3-4 of Amendment 5, the State sets forth the resettlement context. The Pointe-au-Chien Indian Tribe is concerned that the State is seeking to minimize that the Isle de Jean Charles is inhabited primarily by the IJC-BCCM, an indigenous Tribe. The State seems to minimize the political leadership of IJCBCCM by implying that IJC-BCCM and the other coastal tribes are not state recognized, and even describes the UHN as a nonprofit organization. The State has cherry picked documents to undermine that Isle de Jean Charles was a self-sustaining indigenous community with a traditional line of leadership. It seems that if the State actually consulted with the IJC-BCCM and used tribal experts that its discussion of the tribal backgrounds would be very different, and in fact, more accurate. However, the tone of minimizing Tribes carries through the document by:

1. Removing the IJC-BCCM Tribe and Indian community from the description;
2. Replacing the IJC-BCCM tribally-driven approach with the State's approach;
3. Removing the commitment to tribal cultural heritage through establishment of a community center;
4. Excluding the Tribe from the process; and
5. Including a public auction option that may open up settlement to nonIsland residents.

We are concerned that without the IJC-BCCM's leadership involved in this process, that this Project will fail, and will actually hurt the Tribe in its efforts to maintain its cultural heritage. The Isle de Jean Charles people are not only indigenous peoples, but displaced peoples, who deserve to be consulted. We agree that this is a difficult endeavor. Our hope is that our neighbors/cousins/friends who were deemed unworthy to be protected and whose land and lives have been devalued by those choices, will not only be safely resettled, but will be resettled in a way that reflects their unique cultural heritage and that will support the self-determination of the Isle de Jean Charles Band of Biloxi-Chitimacha-Choctaw.

PUBLIC COMMENT: Good afternoon,
I'm writing comments in response to the public comment period regarding the relocation of the community of Isle de Jean Charles. The original proposal developed by the tribal community through many many community meetings should be honored. The original proposal incorporated sustainability, cultural continuity, and many other qualities important to the community. Thank you for the opportunity to submit comments and I appreciate you taking them into consideration.

PUBLIC COMMENT: (same comment sent three times) I write to object IDJC APA 5. Amendment No. 5 excludes Isle de Jean Charles from critical aspects of the planning process regarding the Tribe's resettlement. State planners and policy-makers need to honor the rights of Isle de Jean Charles, as they did throughout the NDRC grant proposal-writing process prior to receiving federal funding. These rights may not be erased as Amendment No. 5 seeks to do. The original plan for a resilient resettlement that "supports and enhances tribal identity, sovereignty, and dignity" must be reinstated.

PUBLIC COMMENT: Please support the residents viewpoint on relocation.

PUBLIC COMMENT: (**same comment sent two times)** The State of Louisiana is requesting a substantial amendment stating that it is necessary to meet the goal of the Isle de Jean Charles Resettlement. However, we are concerned that the initial goal is in fact being put aside. In order to know what the goal really is, it is essential to know where the resettlement process has been and how it unfolded from the start. In 2002, after Isle de Jean Charles was cut out of the Morganza-to-the-Gulf Hurricane Protection System, the Isle de Jean Charles Biloxi-Chitimacha-Choctaw Tribal Council met to discuss the condition of their members' lives, future, and culture. The difficult decision to move the Tribe to safety (physical and cultural) was started. As with all planning, each time there is delay the project grows and adapts. The IDJC BCC plan was no different, after the Army Corp of Engineers plan failed to meet the 100% participation requirement for this initial resettlement plan, the Tribe's planning continued. Another storm later renewed the spirit of the Tribe, and the Tribe proposed another resettlement larger and more detailed to Terrebonne Parish. After the Terrebonne Parish Council failed to approve the project for diverse reasons, some still unknown, the Tribal council continued. Now the current state of resettlement is again in danger. The plans may have shifted, grown, and adapted but one thing remains -- the intent of the Isle de Jean Charles Biloxi-Chitimacha-Choctaw Tribal Council and leaders has remained the same. The intent is to protect our people and culture in a manner that will support and enhance tribal identity, sovereignty and dignity. We would like to put forth the following questions, comments and concerns.

Comment #1 The section of the NDRC application being replaced describes the state's commitment to supporting long-standing tribally-driven efforts to reunite the Island people and rejuvenate the Island lifeways. *How will erasing almost two-decades of Indigenous Knowledge help "to a resilient and historically contextual community." (Page 2 of APA #5)?* "The Isle de Jean Charles Band of Biloxi Chitimacha-Choctaw located in coastal Terrebonne Parish, a region that leads the world in land loss, is ideally positioned to develop and test resettlement adaptive methodologies because their need to resettle has become urgent. Until the new millennium, the tribe's self-sufficiency and ability to adapt to change and maintain culture at the site of their community were strong and allowed most tribal families to remain on the site called 'The Island.' With the loss of more than 98 percent of the land, however, relocation is inevitable; only 320 acres remain of what was a 22,400-acre Island in 1955. Many families have been forced to leave the Island on account of this dramatic condition." (Pg 105 National Disaster Resilience Competition Phase II Application)

Comment #2 We are concerned that Amendment No. 5 will erase all aspects of the project being a *Tribal* Resettlement and negate Tribal rights:.

- The amendment replaces a section of the NDRC application that commits, "All factors of the design and process will help to support and enhance tribal identity, sovereignty and dignity." (pg. 107 of National Disaster Resilience Competition Phase II Application).
- The indigenous heritage of the Island (pg. 3) presents a limited representation of the Isle de Jean Charles Biloxi-Chitimacha-Choctaw tribe's history and culture which state planners crafted without consulting the Tribal Council or Tribal membership.

Comment #3 We are concerned that the amendment removes several key elements of sustainability and resilience, including:

A. Energy

- The amendment also replaces the section of the application that stated, "Tribal members will have the opportunity to be trained in advanced sustainable building technology and participate in construction of new homes while gaining capacity for employment in the region." (pg 108 of NDRC application)

B. Commercial Economic Development

- There are no assurances that tribally owned businesses will be afforded a real opportunity to operate out of the new community.
  Where in the budget will Economic Development come from?

C. Property Rights

The State presented options regarding this activity in place of the Isle de Jean Charles BCC Tribe owning and managing the property:

1. Sales, leases and donations specific to real property dispositions within the newly developed Isle de Jean Charles Community Resettlement location. This may include residential lots deeded to community members, critical infrastructure and recreational spaces to be maintained by a governing nonprofit or unit of local government, and sales and leasing activities for commercial purposes and to the economic benefit of the community;

2. Disposition of any interests in real property acquired relative to the current Isle de Jean Charles. Isle de Jean Charles is a Tribal community, inhabited by Tribal people. The State has recognized that Isle de Jean Charles is a historical indigneous community. The Island people have sustained off of the land and thrived on the Island despite purposeful discrimination policies against Indian people in Terrebonne Parish. The land loss on the Island was caused by local, state, and federal government actions or inactions in levee development, extractive industry permitting, and lack of regulations to adequately deal with sea level rise. This resettlement project should in fact be replacement land that provides a safe space for the Isle de Jean Charles Tribe and its people to adapt and thrive. However, instead of working with the Tribe and recognizing the Tribal proposal to own or manage the land and new space as either a nonprofit or governmental entity, the State has excluded the Tribe as the governmental entity managing the land, sales and leases of the replacement Tribal land. The State did not discuss "Option C"-- public auction option -- in any detail but included it in the diagram on page 9. The Tribe objects to Option C because it undermines the intent of the Project.

Comment #4

"With Resettlement funding now in place, Louisiana has the ability to make possible a structured and voluntary retreat from Isle de Jean Charles that is thoughtful and equitable, while maximizing opportunities for current and past island residents." (Pg 3 IDJC APA #5.)

- As described in Amendment No. 5, the resettlement would exclude renters and discourage some residents on the Island due to their inability to "demonstrate financial ability to build a new home" or pay insurance fees and taxes on a new property, hindering their decision of moving to safety.
  How is this being thoughtful and equitable?

Comment #5

Community built infrastructure

- The amendment states, "The state will use program funding to make infrastructure improvements necessary for the development of the new community to include, but not limited

to: streets, sewerage, water and other utilities, sidewalks, parks, etc. If funding is available, the program will also construct community center and/or other public facilities." (pg 10).

- This replaces the commitment to a distinct tribal community center described on pg. 107 in the original NDRC application.

The Tribe objects to removing a community center from the Project. The community center is a focal point for gathering, sharing of tribal knowledge and cultural heritage, and a meeting space for tribal events. *How can the main community building proposed in the original plan now be an afterthought if funding is available?*

The proposed, Substantial Amendment No. 5: Introduction of new activities and project narrative clarifications for the utilization of community development block grant funds under the National Disaster Resilience Competition (NDRC) Resettlement of Isle de Jean Charles, "replaces program descriptions for the Isle de Jean Charles Resettlement (Exhibit B: Threshold Requirements – Page 15 and Exhibit E: Soundness of Approach – Pages 105-109, National Disaster Resilience Competition Phase II Application) (pg 1 of APA 5). The Tribe has concerns as to the motives for these changes. The State has excluded Tribal leadership from participation, and objects to removing the portions of the project that would promote cultural heritage, ensure resiliency, and foster a safe and positive move to replacement lands.

PUBLIC COMMENT (see screen shots, below):

I'm writing in opposition to the State of Louisiana's proposed Amendment #5, which would have a devastating effect on the Isle de Jean Charles Biloxi-Chitimacha-Choctaw Tribe and threaten their cultural survival.

The tribe has lost more than 90-percent of its traditional lands to erosion and subsidence in coastal Louisiana, and more than 75 percent of its people have been displaced over the last 65 years due to repeated storms and flooding. In 2002, their Tribal Council began planning for the tribe's resettlement inland to reunite its displaced people and revitalize their traditional ways of life.

The tribe worked closely with Louisiana's Office of Community Development to acquire land inland for the resettlement through funding from the U.S. Department of Housing and Urban Development's (HUD) National Disaster Resilience Competition (NDRC), and HUD awarded the state $48 million to support the tribe's vision.

The state has since excluded the tribe from the decision-making process and proposed Amendment #5, which flies in the face of the original plan that would have supported and enhanced tribal identity, sovereignty and dignity.

Some of the more egregious changes include the following:

- Amendment No. 5, if accepted by HUD, will erase the following key assurance made in the original NDRC application: "All factors of the design and process will help to support and enhance tribal identity, sovereignty and dignity" (pg 107 of NDRC awarded application).

- Amendment No. 5 presents a limited history of the Isle de Jean Charles Biloxi-Chitimacha-Choctaw Tribe, which state planners crafted without consulting the Isle de Jean Charles Biloxi-Chitimacha-Choctaw Tribal Council.

- As described in Amendment No. 5, the resettlement would exclude renters and discourage some residents on the Island due to their inability to "demonstrate financial ability to build a new home" or pay insurance fees and taxes on a new property, preventing them from moving to safety.

- Amendment No. 5 states, "The state will use program funding to make infrastructure improvements necessary for the development of the new community to include, but not limited to: streets, sewerage, water and other utilities, sidewalks, parks, etc. If funding is available, the program will also construct community center and/or other public facilities." (pg 10). This replaces a commitment in the original application to build a distinct tribal community center: "A Community Center is planned as part of the development, serving as an anchor and gathering place for the tribe" (pg. 107 of NDRC awarded application).

I am writing to you as the president of Sealaska Heritage Institute, a regional Native nonprofit whose mission is to perpetuate and enhance the Tlingit, Haida and Tsimshian cultures of Southeast Alaska. Our people, along with tribes across the country, have endured the ravages of outsiders seeking to extinguish our cultures and take our land and resources.

I am also writing as a Tlingit and an anthropologist who has seen first-hand the powers-that-be trodding upon the rights of indigenous populations with the aim of stamping out the cultures of first peoples.

I hope the goal of the State of Louisiana in this matter is something other than that, but the state's exclusion of the tribe from the decision-making process—a process that will affect the very survival of their culture—is not acceptable and, frankly, speaks to the arrogance of whoever is leading this ill-begotten campaign.

I implore you to include the tribe in the decision-making process, abolish Amendment #5 and return to the original plan that was crafted in consultation with the tribe.

To do anything less would paint the State of Louisiana as a people who have failed to learn from history's abysmal treatment of its first peoples and who are doomed to repeat the country's mistakes.

OCD RESPONSE: Thank you for your comment on the State of Louisiana's proposed Action Plan Amendment 5 for the resettlement of the residents of Isle de Jean Charles.

The state originally described the concept of community resettlement as part of a broader resilience policy framework. In its Phase I application, this framework was referred to simply as Louisiana's Resilience Framework (LRF), later evolving in the state's Phase II application to Louisiana's Strategic Adaptations for Future Environments (LA SAFE). In Phase I, the application described resettlement as a potentially appropriate intervention for "at-risk communities currently in environmentally unsafe

conditions, such as Isle de Jean Charles in coastal Terrebonne Parish" (page 39). Moreover, such communities for which resettlement may be appropriate were described using a series of location-specific characteristics, inclusive of places having been "ravaged by multiple events, and are subject to long-standing environmental stressors, such as land loss, subsidence, and sea-level rise contributing to the severity of disaster events. Specifically, these are communities within Special Flood Hazard Areas, outside of planned future structural protection systems, and those that cannot reasonably absorb future projected insurance costs, or the cost of projected losses of a 100-year flood event occurring within the next 50 years" (page 40).

Phase I additionally described what such community resettlement projects may entail, noting, "resettlement activity may involve removing a community from an area that is not realistically viable to a safer location either in close proximity to an existing economic corridor (e.g. the hub of an immovable industry), or to a location prime for future economic growth" (page 46). Further underlining a location-specific approach, Phase I described the primary objective of community resettlement, "to relocate a community from an area that is neither environmentally nor economically sustainable to one that can be sustainable in both respects through the measured 50-year modeling period" (page 46). In its Phase I submission, the state clearly outlined community resettlement as an intervention appropriate for specific geographic locations susceptible to prohibitively high degrees of current and future flood risk, characteristics all describing present-day Isle de Jean Charles. Finally, Phase I outlined the presence of several native tribes in specifically high-risk places, "Coastal Louisiana is home to the Isle de Jean Charles Band of Biloxi-Chitimacha Choctaw, the Pointe-Au-Chien Indian Tribe, the Grand Caillou-Dulac Band of the Biloxi-Chitimacha Choctaw, the Bayou Lafourche Band of the Biloxi-Chitimacha, the Avoyel-Taensa Tribe/Nation, and the United Houma Nation" (page 40).

As the state moved forward in preparation of its Phase II submission, it sought to propose a specific example of a community resettlement project in line with the characteristics clearly outlined and described in Phase I – characteristics describing specific locations and peoples living at high risk of severe flood impacts. Concurrently, tribal leadership of the Isle de Jean Charles Band of the Biloxi-Chitimacha Confederation of Muskogees (BCCM) provided the state with a basic narrative, paraphrased for the purposes of this response: *Isle de Jean Charles is home to their tribe. The Island is eroding away at an alarming rate and is subject to severe repetitive disaster events. Therefore, in following this narrative as presented, resettling the tribe would represent an ideal example embodying the community resettlement concept outlined in the state's Phase I submission.* Having no reason to question this description of Isle de Jean Charles at the time, the state described in its Phase II submission the resettlement project accordingly. However, the submission also made specific note of location-specific characteristics, stating, "This resettlement is necessitated by ongoing coastal land loss and barrier island destruction, a condition both demonstrated and exacerbated by Hurricane Isaac" (page 15). The Phase II submission went on to describe the process by which a community resettlement would be conducted, noting it would entail, "…a systems-based approach to community-led planning and group migration. It is a small-scale, targeted strategy for culturally-sensitive at-risk communities and special needs groups, including the disabled, the elderly, disaffected minority groups and very low income populations. It is intended to capture a community's remaining – and often rapidly dwindling – value and transfer it to an environment in which it has the opportunity to grow and ultimately thrive" (page 105).

The state's primary error in its Phase II submission was accepting the narrative BCCM leadership offered in its description of Isle de Jean Charles' residents as being exclusively affiliated with the BCCM and its broad characterization of the Island as being synonymous with the BCCM tribe. Shortly after the resettlement grant award was announced, United Houma Nation (UHN) leadership contacted the state and pointed out the historical community and population of current residents are not homogeneously synonymous with the BCCM tribe, and that the Isle de Jean Charles community is composed of a diverse peoples inclusive of BCCM tribal members, UHN tribal members, individuals with ties to both tribes, and those who claim no tribal affiliation. Subsequent to the UHN's claim, the state conducted its own inventory of on-Island conditions, including an initial census of households and initial engagement activities. These findings, outlined in a November 2016 report on initial Data Gathering and Engagement, noted, "…some residents maintain UHN membership. At least two residents are unsure about which organization they belong to. During our interviews, residents did not bring up tribal distinctions and more often noted that everyone on the Island is related" (page 18).

Moreover, as part of this initial engagement effort, the state specifically asked Island residents about their participation in and knowledge of previous resettlement planning efforts. The report states, "Of the 20 residents who responded, 16 had heard about the previous visioning efforts. Of the 16 who heard about it, four said they attended a community meeting. Of these four, two indicated that they were observers and not participants in the work (the other two did not indicate one way or the other). Of the 12 who heard about previous visioning efforts but did not participate, 10 heard about it from other community members and two heard about it from Chief Albert" (page 21). Following this initial engagement effort, the state proceeded in conducting the "community-led" planning effort described in its Phase II submission, with specific emphasis on empowering Island residents living in the specific location at greatest risk, adopting the location-specific approach outlined and described in detail in both Phase I and Phase II submissions.

In facilitating a community-led planning effort, the state has conducted an exhaustive and unprecedented engagement effort. This effort has been punctuated by weekly on-Island, in-home consultations with Island residents, and has encompassed five separate community meetings – three of which were held on the Island itself, with the remaining meetings held just off the Island in Montegut and Pointe Aux-Chenes. Additionally, the resettlement's design team has conducted three design workshops, co-designing specific site elements hand-in-hand with the Isle de Jean Charles community. Finally, as a mechanism to guide the planning process as a whole, a steering committee was formed and convened on six occasions. This steering committee included five Island residents, a representative from both BCCM and UHN tribal councils, a representative from Terrebonne Parish government, and a representative from the Governor's Office of Indian Affairs. Plans described within this Amendment and in greater detail on the project's website, www.isledejeancharles.la.gov, reflect this inclusive, exhaustive, and detail-oriented planning process.

In addition, the state hosted weekly calls throughout 2016 and bi-weekly calls throughout 2017 with BCCM and UHN tribal members and leadership and has attended numerous BCCM and UHN tribal council meetings, all oriented as open-ended outlets to provide input and guidance regarding all aspects of the Isle de Jean Charles resettlement project. BCCM leadership was specifically vocal – and influential – in the

project's site selection, with the state having recently completed the purchase of the BCCM tribal leadership's preferred resettlement site.

However, the state must also remain mindful of the Island's non-homogeneous population. Regarding BCCM and UHN tribes, only one Island resident is an active member of either tribal council. In most cases, those tribal council members with direct ties to the Island moved off of the Island – and to locations that are higher, drier, and safer than the Island – decades ago. More importantly, several Island residents have voiced specific concerns regarding their participation in the project should the project's resources, or the new Isle de Jean Charles community, end up under the direct control of either tribe's leadership. As the specific population at highest risk, the state must prioritize the input of the Island's residents.

On the issue of tribal sovereignty, the state cannot recognize the BCCM or UHN as a sovereign tribal community as doing so would constitute a significant and inappropriate overreach. Neither tribe has been federally recognized by the Bureau of Indian Affairs (BIA), the entity with the responsibility to recognize tribal sovereignty within the United States. Regarding the BCCM, specifically, the state must adhere to its own legal description of the tribe stated in Senate Concurrent Resolution No. 105, as adopted by the Louisiana State Legislature. SCR No. 105 clearly states its intent to "formally reacknowledge (sic) the Indian ancestry of members of the Isle de Jean Charles Band of the Biloxi-Chitimacha Confederation of Muskogees ("BCCM")… for the sole purpose of qualifying for Indian education and health care benefits due these Native American citizens."

The state contends it has conducted itself in good faith, working hand-in-hand with the Isle de Jean Charles community, to develop a plan for a new home for Isle de Jean Charles that directly reflects the wishes and desires expressed by that community. In this sense, the state believes the plan, when constructed, provides every opportunity to support tribal aspirations, preserve cultural heritage and improve tribal economic conditions. Current development plans include a Community Center with capacity for museum exhibits documenting the Island's Native American history, Park Facilities, Festival Grounds on which Pow Wows can be conducted, and a Marketplace. All represent examples of this good faith approach in the planning effort for a new Isle de Jean Charles community. Moreover, regarding the proposed Community Center, specifically, OCD has revised this amendment to clarify its intention to build the center. The amendment now reads, "The state will use program funding to make infrastructure improvements necessary for the development of the new community to include, but not limited to: a community center, streets, sewerage, water and other utilities, sidewalks, parks, etc. If funding is available, the program may also construct additional public facilities."

However, it is essential the Resettlement's direction emphasizes residents' self-determination first and foremost. The residents of Isle de Jean Charles have consistently maintained their desire to make individual choices and have consistently affirmed their right to self-determination apart from the wishes or desires of either tribe's leadership. As such, while the state believes the project can and should benefit the broader interests of both BCCM and UHN tribes, the new community cannot be developed to the exclusive benefit of either. Moreover, while this response illustrates the state's position as to why the project should not be to the exclusive benefit of either tribe, it is also imperative to highlight that the project cannot be to the exclusive benefit to any group in a manner inconsistent with Fair Housing Act (FHA) requirements, which prohibit housing discrimination on the basis of race, color, national origin, religion, sex, familial status, or disability.

As fundamentally vital stakeholders to the Isle de Jean Charles resettlement, the state believes both BCCM and UHN tribes should have use rights to the areas referenced above, including the Community Center/Museum, Pow Wow Grounds/Festival Space, and Marketplace. The state welcomes further discussion as to what appropriate – yet non-exclusive – use agreements may entail. Additionally, and again in recognition of the reality both BCCM and UHN tribes are fundamentally vital stakeholders to the project, the state will continue to exhaust every effort to engage the tribes as partners and will continue to explore every viable opportunity to implement the resettlement project in a manner beneficial to both tribal groups.

Finally, to clarify misconceptions regarding eligibility, all individuals and families who have been permanent residents of the Island at any point in time after August 28, 2012 – the date of Hurricane Isaac's landfall – are eligible to receive property improved with a new home regardless of whether they are renters or own homes on the Island. Former permanent residents of the Island, defined as those who can illustrate permanent residency on the Island prior to Isaac's landfall, are eligible to receive property within the new community, so long as they can illustrate financial ability to improve that property with a new home. This illustration of financial ability serves as a safeguard to ensure all of the homes in the new community are developed in a consistent manner and are constructed with a consistent level of quality, benefitting the community as a whole. To this end, the state is working with other partners and the local banking community to make this opportunity as accessible and affordable as possible to populations residing on the Island prior to August 28, 2012.

Thank you again for your input and interest in the Resettlement of Isle de Jean Charles. For current information on the Resettlement's status, please visit www.isledejeancharles.la.gov. Additionally, do not hesitate to contact OCD if you have any additional questions or comments regarding this initiative.

OCD Note: The following comments relate to specific matters and have been responded to individually.

PUBLIC COMMENT: Protesting amendment due to a lack of notice and due process to the IDJC Biloxi-Chitimacha-Choctaw Tribe.

OCD RESPONSE: Thank you for your comment on the State of Louisiana's proposed Action Plan Amendment 5 for the Resettlement of Isle de Jean Charles. OCD has taken the below outlined steps to ensure this amendment has been subject to adequate notice and due process. These steps are outlined below:

OCD PUBLICATION EFFORTS TO NOTIFY PUBLIC OF IDJC APA 5

1. OCD published the following Public Notice of Public Hearing for IDJC APA 5 on April 5, 2019 in the following two regional papers: The Baton Rouge Advocate (state journal of record) and The Houma Courier:

LOUISIANA OFFICE OF COMMUNITY DEVELOPMENT HOLDS PUBLIC HEARING FOR NDR GRANT APA5

The Louisiana Office of Community Development will hold a public hearing in conjunction with its proposed Action Plan Amendment 5 regarding its National Disaster Resilience grant from the U.S. Department of Housing and Urban Development. The hearing will be held Tuesday, April 16, 2019 from 4 p.m. to 6 p.m., in the 2nd Floor Council Meeting Room at Government Tower, 8026 Main Street in Houma, Louisiana. During the hearing, OCD representatives will accept comments from the public on the Action Plan Amendment, which can be found online at https://www.doa.la.gov/Pages/ocd-dru/Action_Plans.aspx. Members of the public can also submit comments several other ways:

- Using the online form at http://www.doa.la.gov/Pages/ocd-dru/Action_Plans.aspx ;
- Emailing them to ocd@la.gov;
- Mailing them to Disaster Recovery Unit, P.O. Box 94095, 70804-9095, Attn: Janice Lovett; or
- Faxing them to the attention of Janice Lovett at (225)219-9605.

2. OCD posted an announcement of the Public Hearing, as well as the full text of IDJC APA 5, on the OCD website.

3. OCD published the following Public Notice of Public Comment for IDJC APA 5 on April 8, 2019 in the Legal Notices section of eight statewide papers: The Baton Rouge Advocate (state journal of record); The Houma Courier; The Alexandria Town Talk; The Lafayette Daily Advertiser; The Monroe News Star; The Lake Charles American Press; and The New Orleans Times-Picayune:

SUMMARY OF THE PROPOSED ACTION PLAN AMENDMENT NO. 5 FOR UTILIZATION OF CDBG-DR FUNDS FOR RESETTLEMENT OF RESIDENTS OF ISLE DE JEAN CHARLES

The Louisiana Office of Community Development is accepting public comments on an Action Plan Amendment that adds new activities to a state program to resettle the residents of Isle de Jean Charles. The U.S. Department of Housing and Urban Development considers APA 5 substantial because it adds eligible activities to achieve the program's goals. APA 5 also clarifies information contained in the state's Phase II Application to the National Disaster Resilience Competition.

Action Plan Amendment 5 will:

- **Make infrastructure improvements** necessary for the new community, such as streets, sewerage, water and other utilities, sidewalks, parks, etc. If funding is available, the program will also construct community center and/or other public facilities.
- **Dispose of real property**, such as residential lots deeded to community members; sales and leasing of critical infrastructure and recreational spaces; commercial sales and leasing for the economic benefit of the community; and dispose of any interests in real property acquired on the island.
- **Provide public services** related to the economic and social long-term viability of the new community, such as employment, health, education, energy conservation, recreational needs, or limited legal services.
- **Develop renewal energy and conservation** via on-site solar power, either through a large-scale solar farm, solar paneling installed on a unit-by-unit basis, or a combination of both.
- **Create a partnership with a nonprofit** corporation responsible for maintaining the new community after construction, such as the Louisiana Land Trust.
- **Assist a neighborhood-based nonprofit** corporation to serve as the main governing body of the newly established community.
- **Provide technical assistance to nonprofit** organizations that govern the new community and maintain the new site.

- **Develop a new commercial corridor** to promote the long-term economic sustainability of the community, which may include helping businesses that create or retain jobs for low- and moderate-income residents and/or provide affordable goods or services.
- **Provide microenterprise assistance** to new commercial corridor businesses with five or fewer employees.
- **Provide homeownership assistance** to island residents who move to the new community and to those current and recently displaced residents who wish to secure permanent housing off the island, but not in the new community.

The formal public comment period for Action Plan Amendment 5 begins today, April 8, 2019 and continues until 5 p.m. Tuesday, April 23, 2019. A copy of the plan can be viewed at http://www.doa.la.gov/Pages/ocd-dru/Action_Plans.aspx or requested by calling (225)219-9600. After accepting public comments, the state will submit the plan to the U.S. Department of Housing and Urban Development for final federal approval. Members of the public can submit comments several ways:

- Using the online form at http://www.doa.la.gov/Pages/ocd-dru/Action_Plans.aspx ;
- Emailing them to ocd@la.gov;
- Mailing them to Disaster Recovery Unit, P.O. Box 94095, 70804-9095, Attn: Janice Lovett; or
- Faxing them to the attention of Janice Lovett at (225)219-9605.

The funds are part of $92,629,249 in Community Development Block Grant disaster recovery money awarded by HUD to the Louisiana Office of Community Development as a winning entry in the National Disaster Resilience Competition in 2016. The award was for two projects: the Resettlement of IDJC and LA SAFE.

Vietnamese: Muốn biết thêm chi tiết về Kế Hoạch Hành Động, xin gọi số (225) 219-9600 hoặc viết về địa chỉ điện thư janice.lovett@la.gov.

Spanish: Para más información sobre el plan de acción, llame al (225) 219-9600 o email janice.lovett@la.gov.

4. OCD distributed the following news release announcing Public Comment for IDJC APA 5 to statewide media, state legislators, IDJC stakeholders, and OCD and HUD staff on April 8, 2019:

STATE SEEKS PUBLIC COMMENTS ON ENHANCED PLAN FOR RESETTLEMENT OF RESIDENTS OF ISLE DE JEAN CHARLES

The Louisiana Office of Community Development is accepting public comments on an Action Plan Amendment that adds new activities to its program to resettle the residents of Isle de Jean Charles, an island in Terrebonne Parish that is rapidly disappearing into the Gulf of Mexico.

The IDJC resettlement site is located about 40 miles north of the island on the mainland in the Schriever area of Terrebonne Parish. Each of the proposed activities anticipates the additional needs that may arise because of development, construction and program implementation.

“As we move forward in creating this new community, we will naturally adjust our plans to remain responsive to and adapt to the emerging needs of the island residents while continuing to progress toward the program’s goals,” Pat Forbes, OCD executive director, said. “APA 5 is a substantial demonstration of this process of flexible adaptation.”

Action Plan Amendment 5 will make infrastructure improvements and develop renewal energy sources on the new site; develop a commercial corridor and provide microenterprise assistance to businesses that locate on or near the site; create partnerships with nonprofits for maintaining and governing the new community; provide homeownership assistance to resettlement participants; and dispose of real property on the island.

The formal public comment period for Action Plan Amendment 5 begins today, April 8, 2019 and continues until 5 p.m. Tuesday, April 23, 2019. Residents, community leaders and elected officials can view the plan by clicking here and selecting the respective APA link.

5. OCD posted the above news release on the agency website April 8, 2019.

Thank you again for your input and interest in the Resettlement of Isle de Jean Charles. For current information on the Resettlement's status, please visit www.isledejeancharles.la.gov. Additionally, do not hesitate to contact OCD if you have any additional questions or comments regarding this initiative.

PUBLIC COMMENT:

Eligibility

As I have mentioned previously, and other comments may also support, it is my opinion that the recipients and beneficiaries of this grant should be limited to those that have some relationship, current or past, to the island. It is the hope that the Option C is a last resort option, but saying that doesn't negate the perception that the community is not going to be a reconstitution of one dislocated community, but a conglomeration of the people at risk regardless of community connections. Every effort should be made to reach out to the target community members with the message that Option C will not come to pass if the higher priority recipients participate. It is downplayed in this text by being written in outside the chart, but that can't dispel the fear that this option will change the constitution of the resettlement in a way not envisioned by many, if anyone, in the application phase.

Could Option A be expanded to people who have had to move from the island, but are still at risk of flood damage or are otherwise not in safe, sanitary and decent housing? People are not being viewed as they are, and their exposure to risk. Has the structure flooded? Is the house substantially damaged, requiring elevation that they can't afford, but is required by the Flood Damage Prevention Ordinance nonetheless? Is the house flood compliant? Is it in the SFHA? Would the house pass an inspection or be condemned? These questions should be integrated into the calculus of who may receive a structure under Option A.

I support the timing staggering prioritizing Options A and B before C is available. The priorities should be completed and some period of time passed (continuing as an open enrollment period, and preferably with another outreach effort) prior to Option C being made available. It would be natural for people to have a "Field of Dreams" approach to this move, wanting to see it for themselves prior to moving.

The idea of a model home being built in advance of the rest of the buildout is a good idea to give resettlers and existing landowners some insight into an example of a possible final development in function and form. Option B. It is again, my personal position that the funding was provided for the IDJC residents and prior residents and reject the portions of the plan that would allow people outside that finite set to benefit from this project, even if that benefit is the ability to buy a piece of property in an otherwise exclusive new development. The funds should be expended to subsidize or pay for the class B residents so that they can also live in a safe environment reconstituting the community that they had to leave due at least in part to the land loss and insecurity of the island.

Option B should be subsidized to allow those with lower incomes and current homes to build in the new environment. If one key nuclear family can't sell for the price of building on the site, then they can't participate in the resettlement, which could have cascading, negative momentum throughout their extended family group. Since the people would be moving from an owned home to a new home, a First Time Homebuyers program would not apply for this group, but a similar program could be developed to provide an additional incentive above the funds that they would have from liquidating their existing structure on the market.

What happens to this group if they can't sell the structure on the open market at all or in time to participate in the first available Option B application period?

These questions are intended to counteract, to the extent possible, for the institutional inequities that have caused some people to live in harm's way, while maintaining HUD principles of helping LMI households like any other project. Can the state provide a value package that is equal to the cost of having the new structure built? Can the Option B recipients opt in to the models that are being built for A and therefore get economy of scale discounts building the home?

It is my understanding that there is some type of subsidy that may be available to the Option B recipients that have current properties off the island that are still at flood risk, and of too low a value to enable them to build a structure even if the land is free. There is little about this potentiality in the current documents, and there is a concern that this is a lack of transparency that appears to shift an impossible task on the shoulders of those who might otherwise move to the site.

In Option B, the new homeowner would pay for a stub out to the water and sewer lines?

For Option D, will there be any freeboard requirements for new construction, limit on fill foundation, or other affirmative requirements to increase safety?

Site Development

This is a development question, but on the early vision drafts the sports fields were closer to where the event pavilion and commercial kitchen are proposed to go. This seems to make great sense if the pavilion is intended to bring in revenue from parties. The fields being available for family reunions or other pick up games could add value. In the current draft, then are near the community center for the HOA, which is on the driveway in to the facility. That is understandable, too, and more reserved for the community. Which is preferred by the recipient Steering Committee?

The amendment does not appear to clearly discuss the expenditure of the revenues from any commercial development in the project. There is a considerable investment in the infrastructure for both the residential and commercial installations. It is my understanding that the revenue from a solar installation or commercial leases, or even the pavilion would be earmarked to assist with the upkeep of the HOA grounds AND to help pay the taxes and insurances for residents that have not previously had to pay property taxes or homeowners or flood insurance. When will this be fully developed, and will it require another amendment, or is it allowable within the activities that are being requested here?

Is there any information available regarding either a community flood insurance policy for the first three years of the project or other financial supports for homeowners or flood insurance? It is assumed that this will be income based (VLI) as the development should, if it is a reconstitution of the community, be mixed income.

Residential Flexibility
Is a duplex available to allow families to share a wall with elderly or disabled adult children or relatives (assuming both parties are separately or jointly eligible)? If the elder/child/other died, could the other portion be rented for income?

Will the HOA restrictions allow for the addition of additional structures on the lots to accommodate keeping elders nearby?

Nonprofit Corporation
What is the procedure anticipated for the development of or selection of an existing nonprofit? They will oversee a property management firm tasked with maximizing the value that can be earned to support the maintenance and taxes for the residents, so that isn't the role of the nonprofit. What role would the nonprofit have over or with the HOA?

Maintenance of Public Property
I suggest that the State in their budgeting include funding for the Parish for a transition to maintaining bioswales and green infrastructure. This is not, to my knowledge, the skill set of the Parish, and not something that will be immediately transferable to other parish sites. As such, some capacity building support may be required to support this additional training, equipment and effort to allow this to serve as a model and pilot effort not limited by local budgets already expended on mitigation and general public services alike.

Cost of Construction
The cap per unit for Option D appears to be utterly random. OCD is considering a $250,000 cap for the other buyout project, and this doesn't include the demolition of the property (if there is one) or other expenses. Is the $200,000 cap including not only the closing costs but the relocation as well? Using the other data in this report, a 1954 sf home for a 4 bedroom unit, limited to 8 people in this document now shows an unlimited occupancy and a cap of $200,000. Given the cost of construction of $118 per SF (which is lower than other national building estimates for construction of smaller houses) the cost to build a 4 bedroom unit would be $230,572. The chart should be changed to 7-8, and an asterisk to show that the larger families will be on a case by case basis for accommodation. This may not be coming up with the current house sizes, but there is no way to know the size of the applicant structures at this time. Can they tap into the vendor onsite for economy of scale savings?

Forgivable Mortgage
I don't understand the distinction between the 75% condition and the 100% condition. The 75% condition is if the recipient owns and on the island. The 100% is if they own land on the island that is deed restricted. Is the value of the IDJC property taken into account in either of these valuations and resulting mortgages? Do not all of the properties on the island need to have some sort of mortgage instrument or deed restriction? In the 75%, does that include the value of both, and therefore the land is already burdened by the same restricted use as the deed restricted parcels?

If a recipient has a 2 or three bedroom house and therefore receives a 2 or three bedroom house (single individual) can they rent the additional rooms (within the maximum occupancy restrictions) for income if it is still their primary residence?

What is the definition of a second home? Most here would think of a camp or beach house in those terms. Can the island residences be rented out to short term campers for income?

Who is responsible for the oversight of the island property improvements? The nonprofit? The Parish? The state? The mortgagor? I assume that there is an appeals process for conflicts in value estimation if the value is estimated at more than the owner spent/projected in the case that a substantial improvement is made?

Capacity Building Grants
It is within the CDBG programmatic activities for the state to provide capacity building grants. I suggest that these be discussed as an option to increase the capacity of the resettlement to do grant writing, project management or any other skill needed to fund or manage the full vision of the community.

OCD RESPONSE: Thank you for your comment on the State of Louisiana's proposed Action Plan Amendment 5 for the resettlement of the residents of Isle de Jean Charles. OCD has organized responses to this comment to align with how the comment was originally organized:

Eligibility

- **OCD concurs with this comment's assertion that, "Every effort should be made to reach out to the target community members with the message that Option C will not come to pass if the higher priority recipients participate." Pursuant to this effort, OCD will make every possible effort to remove barriers to entry into the new community for all current and past residents of Isle de Jean Charles;**
- **OCD has not considered expanding Option A to populations with no direct connection to Isle de Jean Charles. However, OCD may revise this – or any – aspect of program policy in the future if the situation warrants;**
- **OCD is exploring all possible opportunities to roll out Option B as an affordable pathway to live within the new community. Specific suggestions offered within this comment and in support this goal are noted;**
- **Option D does not allow for new construction. As such, there are no freeboard requirements. However, all units purchased through Option D must be located outside of the current Special Flood Hazard Area (SHFA).**

Site Development

- **Several comments emanating from the 'receiver community' have focused on the location of proposed sports fields. As a result of these comments, the new community's design team will reexamine their location and will decide on a best course of action in consultation with the Isle de Jean Charles and receiver communities;**
- **Regarding expenditure of revenues generated from the new community development, not enough is yet known to accurately pinpoint what such revenues may be directed toward. However, general community upkeep and subsidized property taxes and/or insurance policies have all been identified as potential uses for revenue generated on site;**
- **OCD is actively exploring the possibility of community flood and hazard insurance policies.**

Residential Flexibility

- **Multifamily attached dwellings have not been contemplated as part of the community's residential buildout, but detached auxiliary cottages and the like may be suitable. The project's design team will continue to explore these options in conjunction with the Isle de Jean Charles community.**

Nonprofit Corporation

- **A new 501(c)(3) nonprofit organization will be developed to assume overall management of the newly developed community. A subsidiary homeowners' association (HOA) is expected to be created under the nonprofit's umbrella to manage any covenants, conditions and/or restrictions (CCRs) applied to residential property within the newly developed community. Development of both entities is currently in an embryonic stage, but no decisions will be made regarding composition of boards or other matters of community governance without extensive input from and deliberation with future residents of the new community.**

Maintenance of Public Property

- **This budgeting suggestion is noted and will be further investigated for its feasibility.**

Cost of Construction

- **The $200,000 assistance cap associated with Option D is intended to align with the anticipated value of benefits afforded to Option A recipients. This cap could be amended in the future as more information becomes available regarding the value of Option A benefits, or in the event Option D is found to be insufficient to provide a legitimate opportunity for Island residents to relocate off the Island and apart from the new community;**

Forgivable Mortgage

- **The forgivable mortgage percentages refer only to valuations of benefits conferred to eligible program participants, and refer to mechanisms by which equity is acquired over time through occupancy within the new community (5 years) while also securing requirements applied to on-Island property to prevent its future use as a permanent residence (40 years). In this case, yes, all on-Island properties owned by program participants will either be deed restricted or have the referenced mortgage applied. In the event a program participant does not own any on-Island property, then 100% of the value of the benefit conferred will be applied to property in the new community;**
- **Rental uses within the new community have not as of yet been contemplated, but such scenarios will be clarified in the development of CCRs;**
- **The term 'second home' refers a home that is not a household's main home, or the home where a household "ordinarily" lives most of the time. This is a definition developed by the Internal Revenue Service (IRS), but applies to HUD regulations as CDBG funds cannot be utilized to provide a second home. In this case, CDBG funds are being used to provide to eligible applicants a new main home. If the recipient of the new main home also owns a home on Isle de Jean Charles, that home may continue to be used for non-residential purposes, including recreational, cultural and/or historic purposes;**
- **No, rental agreements involving on-Island property owned by participating program recipients are not consistent with "non-residential" uses;**
- **OCD is responsible for monitoring requirements associated with the application of programs within its portfolio; therefore, it is responsible for enforcement of use agreements applied to on-Island property; any appeals regarding program requirements may be directed to OCD.**

Capacity Building Grants

- **This budgeting suggestion is noted and will be further investigated for its feasibility.**

Thank you again for your input and interest in the Resettlement of Isle de Jean Charles. For current information on the Resettlement's status, please visit www.isledejeancharles.la.gov. Additionally, do not hesitate to contact OCD if you have any additional questions or comments regarding this initiative.

PUBLIC COMMENT (as transcribed from 4/16/19 public hearing):

I have several comments. First of all, I'm glad that you're clarifying exactly what this amendment will do, because anytime there's a change in a government document, we all know there are nice little things kind of hidden away inside of that. Second comment, I'd like to make, it is my intention, that I am speaking for myself, not everyone, but there are many stakeholders, neighbors, in that area who are in, who very much support the residents of Isle de Jean Charles. There is a hope that we can partner with them and with the development to make this thing come to fruition and reality so that they have a viable, safe place to live with some really good commercial corridor on the properties which will give them some income to help them maintain the properties. I also would hope that you would continue to involve TDC, the Terrebonne Development Commission, because I think they would be a tremendous asset, rather than someone from outside Terrebonne Parish dealing with the commercial areas they are going to have done. I believe that, the other thing I want to say is that it is our, in my personal opinion, that this should be reserved as a relocation of the residents and for the residents of Isle de Jean Charles. I believe that an error and a problem if you try to begin expanding out of your originally, you area of intention. I was born and raised in South Louisiana. I know, I have watched. I am third and fourth generation in business here. So, none of this is unknown to me, but I do know if you start veering off of what your original intention was, that you are going to open up a can of worms that's going to be very hard to close. There are many, many, many people in lower Terrebonne Parish that have problems, and that are losing part of their land, but this grant was not identified as the relocation of the people of lower Terrebonne Parish. This grant was identified as the relocation of the residents of Isle de Jean Charles. I believe that if you need to do something else to make it affordable then, figure out a way to sell some of the property and make it a commercial investment, to help make it a frugal fit. The last thing that I would like to say is that it is my hope that you have individual sessions with people who you are asking to move there. I don't think you can ask them to move there if they don't know exactly what their specific case is going to be, what it's going to cost them, how much money they are going to get. I think you need to let them sit with someone who's going to show them 'this is what we're going to do for you, this is what we're going to give you, and this is what it's going to cost you,' and then let them make an informed decision on if they can afford it or not. So, that's all.

OCD RESPONSE: Thank you for your comment on the State of Louisiana's proposed Action Plan Amendment 5 for the resettlement of the residents of Isle de Jean Charles. OCD concurs with many of the comments made here. Of particular note:

- **OCD echoes support for the residents of Isle de Jean Charles, residents of the 'receiver community' in Schriever and all project stakeholders. OCD will continue to do everything in its power to partner with all stakeholder groups to maximize inclusiveness and self-determination;**
- **OCD has engaged with the Terrebonne Economic Development Authority (TEDA) and will continue to work with it and other relevant economic development organizations to program commercial uses within the new Isle de Jean Charles community;**
- **OCD shares with the comment's assertion that the new community should be to the benefit of current and past residents of Isle de Jean Charles. OCD has and will actively continue to work with individuals and families with direct association with the Island to eliminate barriers to entry in the new community.**

Thank you again for your input and interest in the Resettlement of Isle de Jean Charles. For current information on the Resettlement's status, please visit www.isledejeancharles.la.gov. Additionally, do not hesitate to contact OCD if you have any additional questions or comments regarding this initiative.